CITY OF KEYSTONE HEIGHTS
TRAIL HEAD

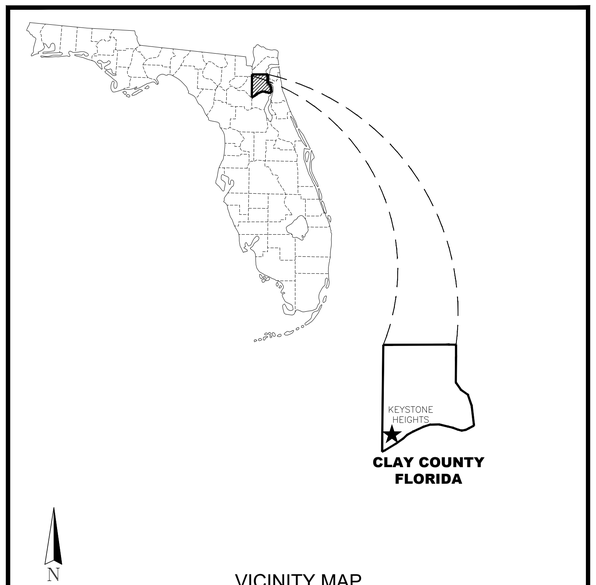

VICINITY MAP

CITY OF KEYSTONE HEIGHTS
CLAY COUNTY, FLORIDA

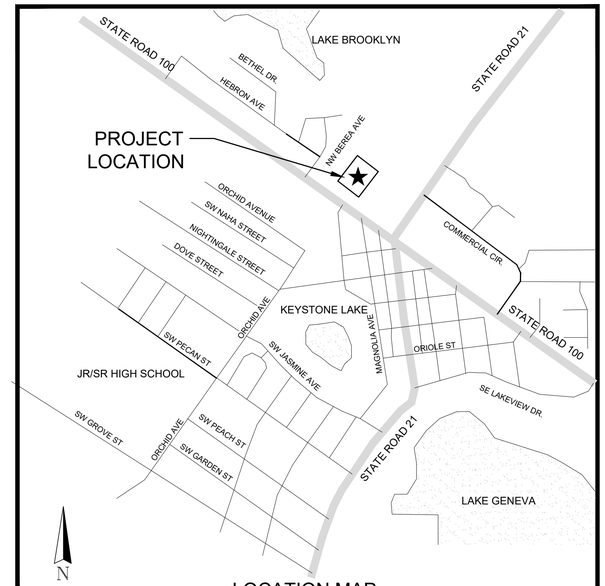

LOCATION MAP

BID DOCUMENTS
MARCH 2020

PREPARED BY:

Michael Baker
INTERNATIONAL
12740 GRAN BAY PKWY WEST, SUITE 2110
JACKSONVILLE, FL 32258
TEL: (904) 380-2500
WWW.MBAKERINTL.COM

CORPORATE LICENSE No. 00004307

Know what's **below.**
Call before you dig.

LIST OF DRAWINGS

DWG. NO.	DESCRIPTION
G-001	COVER SHEET
G-100	GENERAL NOTES
C-001	SURVEY PLAN
C-100	STORMWATER POLLUTION PREVENTION PLAN
C-102	DEMOLITION PLAN
C-200	STAKING PLAN
C-201	SITE DETAILS
C-300	GRADING & DRAINAGE PLAN
C-400	UTILITY PLAN
C-401	UTILITY DETAILS
C-402	CCUA STANDARD TECHNICAL SPECIFICATIONS
L-01	LANDSCAPE PLAN
L-02	TREE MITIGATION PLAN
A-001	ARCHITECTURAL GENERAL NOTES, MATERIAL & ANNOTATION LEGEND
A-002	TYPICAL ADA DETAILS
A-110	COMPREHENSIVE - FLOOR PLAN
A-130	ROOF PLAN
A-201	EXTERIOR ELEVATIONS
A-401	ENLARGED TOILET ROOMS
S0.1	GENERAL NOTES, SPECIFICATIONS & DESIGN CRITERIA
S1.0	FOUNDATION & ROOF FRAMING LAYOUT PLANS
S2.1 - S2.2	SECTIONS & DETAILS
P-100	PLUMBING FLOOR PLAN
M-100	MECHANICAL FLOOR PLAN
E-100	ELECTRICAL SITE PLAN
E-101	ELECTRICAL FLOOR PLAN POWER/LIGHTING

CITY OF KEYSTONE HEIGHTS "IN GOD WE TRUST" SINCE 1925

Michael Baker INTERNATIONAL
12740 GRAN BAY PARKWAY WEST
SUITE 2110, JACKSONVILLE, FLORIDA 32258
(904) 380-2500
CORPORATE LICENSE NUMBER 00004307

Designer: DB	Checked by: TS
Technician: DL	Baker Project No: 175439

Seal:

Keymap/Notes:

REVISIONS

No.	Description	Date	By

Project Name:
CITY OF KEYSTONE HEIGHTS TRAIL HEAD

Drawing Name:
COVER SHEET

BID DOCUMENTS

ENGINEER OF RECORD

Date: MARCH 2020
Scale: AS SHOWN
Drawing Number: G-001

GENERAL NOTES

1. STAGING AREAS DO NOT HAVE UTILITIES. ANY UTILITIES REQUIRED BY THE CONTRACTOR SHALL BE INCIDENTAL TO MOBILIZATION AND SHALL BE COORDINATED WITH THE UTILITY COMPANIES AND SHALL BE THE SOLE RESPONSIBILITY OF THE CONTRACTOR.

2. THE CONTRACTOR WILL BE RESPONSIBLE FOR THE CLEANUP AND DISPOSAL OF ALL TRASH AND DEBRIS CREATED BY HIS WORK OR PERSONNEL. NO BURNING IS ALLOWED ON SITE. ALL TRASH AND DEBRIS MUST BE DISPOSED OF OFFSITE.

3. THE CONTRACTOR SHALL KEEP A WATER TRUCK ONSITE FOR DUST CONTROL DURING ANY OPERATIONS WHICH WILL GENERATE DUST.

4. IT SHALL BE THE RESPONSIBILITY OF THE CONTRACTOR TO PROVIDE A LICENSED SURVEYOR TO LAYOUT THE CONSTRUCTION.

5. CONTRACTOR SHALL VISIT THE SITE TO DETERMINE EXISTING CONDITIONS PRIOR TO SUBMITTING BID. THE CONTRACTOR SHALL REPORT TO THE ENGINEER ANY VARIATIONS FROM THE INFORMATION SHOWN ON THE CONSTRUCTION PLANS.

6. THE PROJECT PAY ITEMS ARE PROVIDED TO BE INCLUSIVE OF ALL WORK TO BE PERFORMED AS SHOWN IN THE CONTRACT DOCUMENTS. ALL WORK NOT IDENTIFIED WITH A SPECIFIC PAY ITEM IS TO BE CONSIDERED REQUIRED WORK TO COMPLETE THE PROJECT, AND IS TO BE INCIDENTAL TO THE COST OF PROJECT PAY ITEMS PROVIDED. QUANTITIES SHOWN IN THE BID ARE APPROXIMATE AND ASSUMED SOLELY FOR COMPARISON OF BIDS. PAYMENT SHALL BE MADE ON ACTUAL UNITS INSTALLED AND APPROVED BY THE ENGINEER.

7. ALL DISPUTES ARISING FROM THE CONTRACTOR SHALL BE DECIDED BY THE CITY MANAGER OR HIS DESIGNATED OFFICIAL.

8. CONTRACTOR IS RESPONSIBLE FOR ALL POLLUTION AND ABATEMENT CONTROL OF ANY CONTAMINATED RUNOFF FROM STOCKPILES, MILLED SURFACES, DISTURBED GROUND, ETC. PLACE SILT FENCE, AND INLET PROTECTION AS REQUIRED PER FDOT SPECIFICATION 104. NO ADDITIONAL PAYMENT WILL BE MADE FOR THIS WORK.

9. THE CONTRACTOR SHALL BE RESPONSIBLE FOR DETERMINING AND ACQUIRING ALL REQUIRED PERMITS INCLUDING ANY RIGHT OF WAY USE PERMITS THAT MAY BE NECESSARY.

10. THE CONTRACTOR IS SOLELY RESPONSIBLE FOR THE LOCATION OF ALL EXISTING UTILITIES WITHIN THE PROJECT LIMITS. ANY EXISTING UTILITY THAT IS DAMAGED BY THE CONTRACTOR SHALL BE PROMPTLY REPAIRED BY THE CONTRACTOR AT NO ADDITIONAL COST. THE REPAIR SHALL BE TO THE SATISFACTION OF THE ASSOCIATED UTILITY OWNER.

11. CONTRACTOR SHALL BE RESPONSIBLE FOR CONTACTING SUNSHINE 811 FOR UTILITY LOCATES.

12. PHASES OF CONSTRUCTION AT DIFFERENT LOCATIONS MAY RUN CONCURRENTLY IF APPROVED BY THE ENGINEER.

13. ASPHALT MILLINGS NOT NECESSARY TO THIS PROJECT SHALL BE THE PROPERTY OF THE CONTRACTOR.

QUALITY CONTROL PLAN

1. CONTRACTOR SHALL BE REQUIRED TO SUBMIT A QUALITY CONTROL PLAN FOR ALL WORK ITEMS THAT REQUIRE QUALITY CONTROL, QUALITY ASSURANCE, MATERIAL VERIFICATION, DENSITY TESTS, AND ALL FIELD AND LABORATORY TESTS REQUIRED BY THE CONTRACT SPECIFICATIONS. CONTRACTOR SHALL PROVIDE FULL QUALITY CONTROL TESTING BY CERTIFIED FIRMS/INDIVIDUALS. OWNER WILL PROVIDE INDEPENDENT QUALITY ASSURANCE VERIFICATION TESTING.

2. WITHIN 10 DAYS OF NOTIFICATION OF INTENT TO AWARD, THE CONTRACTOR SHALL SUBMIT FOUR (4) COPIES OF A WRITTEN QUALITY CONTROL PLAN. THE CONTRACTOR SHALL DESIGNATE A QUALITY CONTROL OFFICER RESPONSIBLE FOR THE QUALITY OF CONSTRUCTION AND SHALL INCLUDE AN ORGANIZATIONAL CHART DESIGNATING QUALITY CONTROL RESPONSIBILITIES. THE PLAN SHALL ENCOMPASS A PROGRAM OF QUALITY CONTROL ACTIVITIES FOR THE PROJECT AS A WHOLE, AS WELL AS SPECIFIED PROCEDURES FOR EACH ELEMENT OF WORK.

3. PRIOR TO COMMENCING ANY CONSTRUCTION ACTIVITIES, THE CONTRACTOR SHALL FIELD VERIFY ALL EXISTING CONDITIONS AND PROPOSED LAYOUT. ANY DISCREPANCIES WITH THESE PLANS SHALL BE REPORTED TO THE ENGINEER OF RECORD FOR COORDINATION AND RESOLUTION.

4. FOR EACH MAJOR ELEMENT OF WORK, THE CONTRACTOR SHALL DESCRIBE IN THE QUALITY CONTROL PLAN PRELIMINARY INSPECTION PROCEDURES TO BE ACCOMPLISHED PRIOR TO START UP, PROGRESS INSPECTION PROCEDURES TO MONITOR THE WORK IN PROGRESS, AS WELL AS FINAL INSPECTIONS TO VERIFY ALL TESTS HAVE BEEN PERFORMED AND ARE PASSING, AND ALL CONDITIONS OF THE SPECIFICATIONS HAVE BEEN MET.

5. THE CONTRACTOR SHALL BEAR THE COST OF AND BE RESPONSIBLE FOR ALL "QUALITY CONTROL" TESTING. ALL RESULTS SHALL BE FURNISHED TO THE ENGINEER TO ENSURE CONFORMANCE TO THE SPECIFICATIONS AND CONTRACT DOCUMENTS.

6. ASPHALT TESTING
   A. THE CONTRACTOR SHALL PROVIDE LABORATORY FACILITIES AT THE PLANT FOR THE USE OF THE ENGINEER'S ACCEPTANCE TESTING AND THE CONTRACTOR'S QUALITY CONTROL TESTING. THE LAB SHALL MEET THE REQUIREMENTS OF ASTM D3666.

   B. THE CONTRACTOR SHALL HAVE ON SITE A NUCLEAR DENSOMETER DURING ALL PAVING OPERATIONS IN ORDER TO ASSIST IN THE DETERMINATION OF THE OPTIMUM ROLLING PATTERN, TYPE OF ROLLER AND FREQUENCIES, AS WELL AS TO MONITOR THE EFFECT OF THE ROLLING OPERATIONS DURING PRODUCTION PAVING. THE CONTRACTOR SHALL ALSO SUPPLY A QUALIFIED TECHNICIAN DURING ALL PAVING OPERATIONS TO CALIBRATE THE NUCLEAR DENSOMETER AND OBTAIN ACCURATE DENSITY READINGS FOR ALL NEW BITUMINOUS CONCRETE. THESE DENSITIES SHALL BE SUPPLIED TO THE ENGINEER UPON REQUEST AT ANY TIME DURING CONSTRUCTION.

CONTRACTOR STORAGE, STAGING, DUST AND HAUL ROADS

1. THE CONTRACTOR WILL BE RESPONSIBLE FOR THE STORAGE AND SECURITY OF HIS MATERIAL AND EQUIPMENT AND SHALL PROVIDE STORAGE FACILITIES AS NECESSARY. THE CONTRACTOR'S VEHICLE AND EQUIPMENT STORAGE AND STAGING AREA SHALL BE COORDINATED WITH THE ENGINEER DURING THE PRECONSTRUCTION MEETING.

2. ALL COSTS ASSOCIATED WITH PREPARING THE STORAGE AND STAGING AREA SITE SHALL BE BORNE BY THE CONTRACTOR. THIS INCLUDES BUT IS NOT LIMITED TO, CLEARING AND GRADING OF THE SITE, CONSTRUCTION OF ALL TEMPORARY UTILITIES AND ACCESS ROADS, ALL SECURITY FENCING, ETC. AT THE CONCLUSION OF THE CONTRACT THE CONTRACTOR SHALL RESTORE THE SITE TO ITS PRE-CONSTRUCTION CONDITION.

3. SPECIFICATIONS ARE PROVIDED AS OUTLINE REQUIREMENTS FOR THE CONTRACTOR TO APPLY WATER, CHEMICALS, VEGETATION OR OTHER MATERIALS TO PREVENT THE OCCURRENCE OF DUST WHICH WILL BE OBJECTIONABLE TO THE OPERATIONS/USERS OF THE AREA. CONTRACTOR SHALL DISCONTINUE OPERATIONS WHICH VIOLATE EXISTING LAWS. COSTS FOR CONTROLLING DUST OR POLLUTANTS TO THE AIR OF ANY KIND SHALL BE INCIDENTAL TO THE CONTRACT.

4. HAUL ROADS TO BE USED UNDER THIS PROJECT SHALL BE THOSE INDICATED ON THE DRAWINGS OR OTHERWISE SPECIFICALLY DESIGNATED BY THE ENGINEER. IN GENERAL THE CONTRACTOR SHALL CONFINE EQUIPMENT AND HAULING TO THE AREAS UNDER CONSTRUCTION. NO DEBRIS SHALL BE ALLOWED ON THE ADJACENT ROADWAYS. THE PAVEMENT WILL BE CLEANED BY THE CONTRACTOR USING POWER BROOMS OR SWEEPERS, AS REQUIRED, TO KEEP THE AREA CLEAR OF ALL SOILS, CLODS OR OTHER DEBRIS.

5. HAUL VEHICLES DELIVERING PAVING MATERIALS TO WORK ZONES SHALL USE THE DESIGNATED HAUL ROUTES. THE CONTRACTOR SHALL INSURE THAT VEHICLES WAITING TO LOAD OR UNLOAD ARE STACKED IN A LOCATION THAT DOES NOT IMPEDE TRAFFIC.

6. THE CONTRACTOR SHALL RESTORE ALL TURFED AND PAVED AREAS USED FOR HAUL ROADS TO THEIR ORIGINAL CONDITION, INCLUDING THE ESTABLISHMENT OF TURF. ALL HAULING ALONG OR CROSSING STATE ROADS SHALL BE ACCOMPLISHED IN ACCORDANCE WITH THE FLORIDA DEPARTMENT OF TRANSPORTATION STANDARDS AND SHALL BE COORDINATED BY AND ACCOMPLISHED BY THE CONTRACTOR. ALL COSTS FOR RESTORING OF HAUL ROADS AND STAGING AREAS SHALL BE BORNE BY THE CONTRACTOR.

MOT GENERAL NOTES

1. THE EXISTING POSTED SPEED SHALL BE MAINTAINED FOR ALL PHASES OF CONSTRUCTION ON THE PROJECT UNLESS OTHERWISE NOTED IN THE PLANS.

2. ALL STRIPING THAT CONFLICTS WITH THE TRAFFIC CONTROL STRIPING SHALL BE REMOVED AND THE COST OF THE REMOVAL WILL BE INCLUDED IN THE COST OF PAY ITEM P-100, MAINTENANCE OF TRAFFIC. PAINTING OVER EXISTING STRIPES WILL NOT BE ALLOWED.

3. EXISTING SIGNS WHICH CONFLICT WITH THE TRAFFIC CONTROL PLANS SHALL BE REMOVED, STORED AND REINSTALLED OR COVERED AS DIRECTED BY THE ENGINEER. THE COST OF REMOVING, STORING AND REINSTALLING OR COVERING SIGNS SHALL BE INCLUDED IN THE BID PRICE FOR PAY ITEM, MAINTENANCE OF TRAFFIC (FDOT 102).

4. IF EXISTING SIGNS ARE DAMAGED BY THE CONTRACTOR DURING CONSTRUCTION BEYOND USE, AS DETERMINED BY THE ENGINEER, SIGNS SHALL BE REPLACED BY THE CONTRACTOR AT HIS EXPENSE.

5. ADVANCED WARNING SIGNS SHALL BE INSTALLED AS NEEDED PER THE APPLICABLE FDOT STANDARD INDEX UNLESS OTHERWISE SHOWN IN THE PLANS.

6. DROP OFF CONDITIONS SHALL BE SATISFIED AND TREATED AS SHOWN IN FDOT STANDARD PLANS 102-600.

7. WORK ZONE SIGNS SHALL BE PLACED IN ACCORDANCE WITH THE APPLICABLE FDOT STANDARD PLANS 102-600.

8. DURING WORK WITHIN 200' OF ANY ROADWAY INTERSECTION CONTRACTOR SHALL PERFORM MAINTENANCE OF TRAFFIC IN ACCORDANCE WITH FDOT PLANS 102-603, 604, 605 AND POST FLAGMEN TO DIRECT TRAFFIC.

9. DURING WORK WITHIN TRAVEL WAY MORE THAN 200' FROM ANY ROADWAY INTERSECTION, CONTRACTOR SHALL PERFORM MAINTENANCE OF TRAFFIC IN ACCORDANCE WITH FDOT PLANS 102-603, 604, 605 AND POST FLAGMEN TO DIRECT TRAFFIC.

10. ROAD CLOSURES AND DETOURS MUST BE COORDINATED WITH CITY OFFICIALS WITHIN 7 DAYS OF CLOSURE. NO ROAD SHALL REMAIN CLOSED DURING NON WORKING HOURS.

11. CONTRACTOR IS RESPONSIBLE FOR COORDINATING M.O.T. FOR PLACEMENT OF FINAL PAVEMENT MARKINGS WITH THE ENGINEER. ANY VARIATIONS FROM THE M.O.T. PLAN SHOWN FOR PLACEMENT OF FINAL PAVEMENT MARKINGS SHALL BE SUBMITTED FOR APPROVAL BY THE ENGINEER.

CITY OF KEYSTONE HEIGHTS
"IN GOD WE TRUST"
SINCE 1925

Michael Baker
INTERNATIONAL
12740 GRAN BAY PARKWAY WEST
SUITE 2110, JACKSONVILLE, FLORIDA 32258
(904) 380-2500
CORPORATE LICENSE NUMBER 00004307

Designer: DB	Checked by: TS
Technician: DL	Baker Project No: 175439

Seal:

Keymap/Notes:

REVISIONS

No.	Description	Date	By

Project Name:

CITY OF KEYSTONE HEIGHTS TRAIL HEAD

Drawing Name:

GENERAL NOTES

BID DOCUMENTS

ENGINEER OF RECORD

Date: MARCH 2020

Scale: AS SHOWN

Drawing Number: G-002

MAP SHOWING A TOPOGRAPHIC SURVEY
OF
KEYSTONE HEIGHTS TRAILHEAD
BEING A PORTION OF
SECTION 19
TOWNSHIP 8 SOUTH, RANGE 23 EAST
AND BEING PART OF
PINECREST SUBDIVISION, PART 1
AS RECORDED IN PLAT BOOK 4, PAGE 42
CLAY COUNTY, FLORIDA

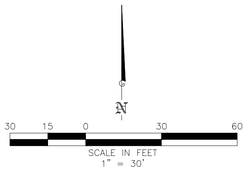

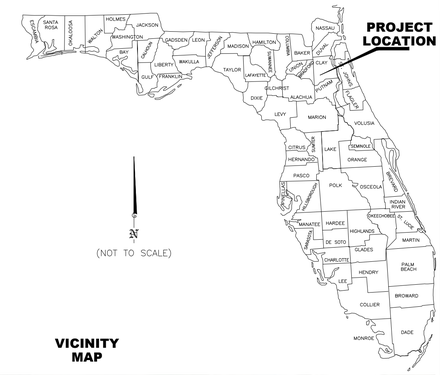

VICINITY MAP

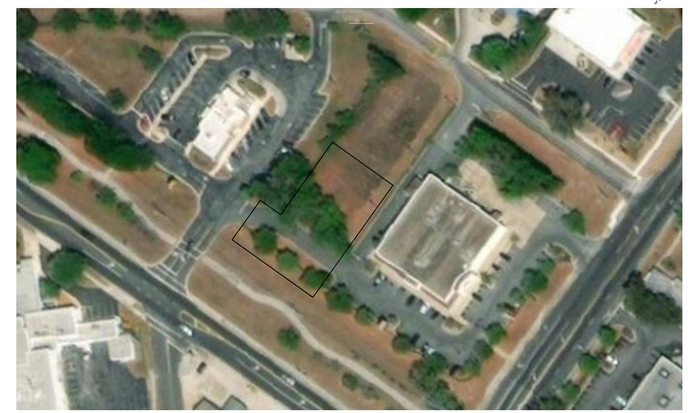

PROJECT LOCATION

LEGEND:

- ● = FOUND 1/2" IRON PIPE UNLESS OTHERWISE NOTED
- ⊙ = FOUND IRON ROD UNLESS OTHERWISE NOTED
- ■ = FOUND 4"x4" CONCRETE MONUMENT UNLESS OTHERWISE NOTED
- —OH— = OVERHEAD UTILITY LINES
- = LIGHT POLE
- = ELECTRICAL WIRE PULL BOX
- = MONITORING WELL
- = MANHOLE GREASE CLEAN OUT
- = MANHOLE STORM DRAINAGE
- = MANHOLE SANITARY SEWER
- = FIRE HYDRANT
- = WATER METER
- = POWER POLE CONCRETE
- = WATER VALUE
- = UNDERGROUND ELECTRIC BOX
- = ASPHALT PAVEMENT
- = CONCRETE

SURVEYORS NOTES:

1.) THIS IS NOT A BOUNDARY SURVEY.

2.) BEARINGS SHOWN HEREON REFER TO FLORIDA STATE PLANE, FLORIDA EAST ZONE, NORTH AMERICAN DATUM OF 1983(2011) ADJUSTMENT AND AND ARE BASED GEODETIC SURVEY PERFORM BY THIS FIRM, DATED 02/13/2017. THE BEARING BASE BEING THE NORTHERLY RIGHT OF WAY LINE OF STATE ROAD NO. 100, SAID LINE HAVING A GRID BEARING OF N 54°23'44" W.

3). BENCH MARK ORIGIN: F.D.O.T. BRASS DISK IN BACK OF SIDEWALK STAMPED 7111008 BM 7, ELEVATION 140.24 FEET NAVD 88, FROM F.D.O.T. DATA BASE 7111008, ELEVATIONS SHOWN HEREON REFER TO NAVD 1988 AND ARE IN FEET, SITE BENCHMARKS ARE BASED ON THIS CONTROL POINT AND ARE SHOWN ON THIS SURVEY.

4.) SOURCES OF INFORMATION:
*BOUNDARY SURVEY BY THIS FIRM W.O. NO. 17-025, DATED 02/15/2017

SURVEY PLAN C-001

RICHARD J. JENKINS, DATED 10/17/2019
FLORIDA REGISTERED LAND SURVEYOR NO. 4421
NOT VALID WITHOUT THE SIGNATURE AND THE ORIGINAL RAISED SEAL OF A FLORIDA LICENSED SURVEYOR AND MAPPER

LD BRADLEY LAND SURVEYORS
OLD WORLD KNOWLEDGE...NEW AGE TECHNOLOGY

L. D. BRADLEY LAND SURVEYORS
510 SOUTH 5TH STREET
MACCLENNY, FLORIDA 32063
PHONE (904) 786-6400 FAX (904) 786-1479
LICENSED BUSINESS No. 6888

W.O. NO.: 19-390	SURVEY DATE: 10/16/2019	DRAFTED BY: DHB
CHECKED BY: RJJ	CAD FILE: 19390.DWG	FB 1125, PG 55

W.O. NO.: D-19-390

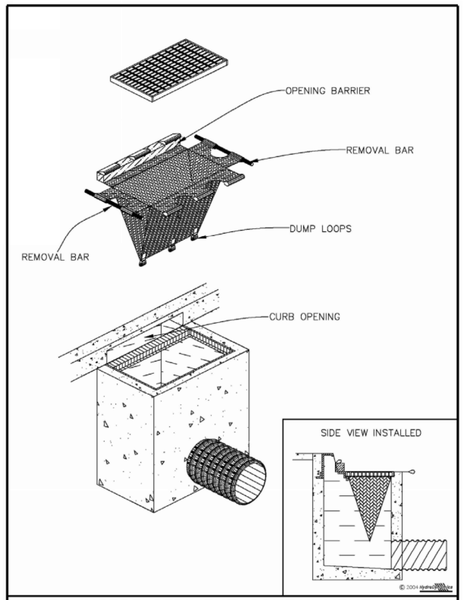

INLET INSERT SEDIMENT CONTAINMENT SYSTEM

12/04

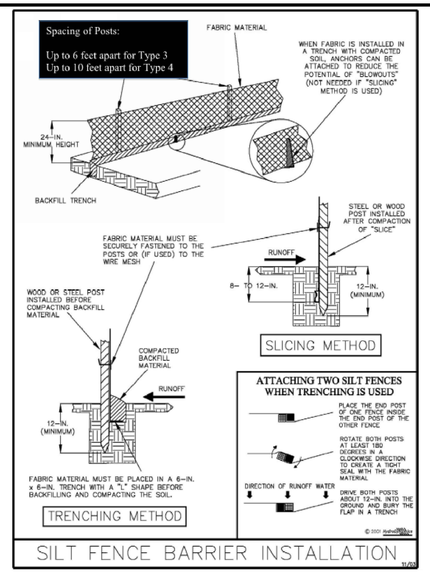

SILT FENCE BARRIER INSTALLATION

11/03

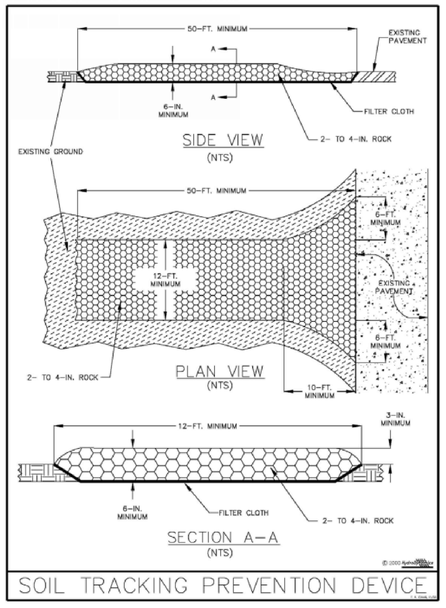

SOIL TRACKING PREVENTION DEVICE

SWPPP GENERAL NOTES:

1. PRIOR TO CLEARING, A SILT FENCE (TRENCHED 4 INCHES DEEP AND BACKFILLED ON THE UPHILL SIDE) SHALL BE INSTALLED AROUND THE PERIMETER OF THE SITE AS SHOWN IN PLANS. A DOUBLE ROW OF SILT FENCE REINFORCED WITH FIELD FENCING (WITH THE SAME INSTALLATION AS ABOVE) SHALL BE PLACED AROUND ANY VEGETATIVE BUFFERS AND WETLAND AREAS.

2. DURING THE CLEARING, GRUBBING AND SITE GRADING STAGES, AREAS THAT ARE DISTURBED MORE THAN 7 DAYS SHALL BE STABILIZED WITH A FAST GERMINATING, LOW SEED BAHIA GRASS OR OTHER APPROVED TEMPORARY VEGETATION APPLIED AT MANUFACTURER'S RECOMMENDATIONS. AFTER SEEDING, EACH AREA SHALL BE MULCHED WITH 4,000 POUNDS OF SYNTHETIC STRAW PER ACRE. ON ALL EXPOSED SLOPES THAT ARE EQUAL TO OR GREATER THAN 5%, AN EROSION BLANKET® SHALL BE USED UNTIL THE AREA ACHIEVES FINAL STABILIZATION.

3. AFTER THE INITIAL SITE GRADING WORK, ALL PROPOSED INLET (S) OR OUTFALLS, ONCE INSTALLED, SHALL BE PROTECTED FROM EROSION AND SEDIMENT RUNOFF BY THE USE OF FILTER FABRIC AND PROPERLY INSTALLED INLET FILTERS. DISTURBED PORTIONS OF THE SITE WHERE CONSTRUCTION ACTIVITIES HAVE PERMANENTLY CEASED SHALL BE STABILIZED WITH SOD OR OTHER PERMANENT STABILIZATION METHODS (IF OTHER METHODS ARE USED, THIS SWPPP WILL BE MODIFIED) NO LATER THAN 14 DAYS AFTER THE LAST CONSTRUCTION ACTIVITY. .

4. TIME CONSTRUCTION ACTIVITIES TO LIMIT IMPACT FROM SEASONAL CLIMATE CHANGES OR WEATHER EVENTS.

5. DO NOT REMOVE PERIMETER CONTROLS UNTIL AFTER ALL UPSTREAM AREAS ARE FULLY STABILIZED AND PERMANENT GROUNDCOVER IS ESTABLISHED.

6. ALL SEDIMENT SHALL BE RETAINED ON THE DEVELOPMENT SITE.

7. PROJECT AREAS:
   (A) THE ESTIMATED TOTAL PROJECT AREA IS 0.75± ACRES.
   (B) THE ESTIMATED AREA TO BE DISTURBED DURING CONSTRUCTION ACTIVITIES IS 0.28± ACRES.

8. OFF-SITE VEHICLE TRACKING - WILL BE CONTROLLED BY THE FOLLOWING METHODS:
   (A) LOADED HAUL TRUCKS ARE TO BE COVERED BY A TARPAULIN AT ALL TIMES.
   (B) EXCESS DIRT ON ROAD WILL BE REMOVED DAILY BY THE CONTRACTOR.
   (C) RUMBLE STRIPS SHALL BE PLACE AT THE SITE ENTRANCE DURING CONSTRUCTION TO HELP PREVENT SOIL TRACKING ONTO ADJACENT ROADWAYS.

9. WASTE DISPOSAL

   (a) THE CONTRACTOR WILL PROVIDE LITTER CONTROL AND COLLECTION WITHIN THE PROJECT BOUNDARIES DURING CONSTRUCTION ACTIVITIES.
   (b) ALL FERTILIZER AND CHEMICAL CONTAINERS SHALL BE DISPOSED OF BY THE CONTRACTOR ACCORDING TO EPA'S STANDARD PRACTICES AS DETAILED BY THE MANUFACTURER.
   (c) NO SOLID MATERIALS, INCLUDING BUILDING AND CONSTRUCTION MATERIALS, SHALL BE DISCHARGED TO WETLANDS OR BURIED ON-SITE.
   (d) ALL SANITARY WASTE WILL BE COLLECTED FROM PORTABLE UNITS BY A LICENSED SANITARY WASTE MANAGEMENT CONTRACTOR AS REQUIRED BY STATE REGULATIONS.

10. STABILIZATION PRACTICES STABILIZATION MEASURES, SUCH AS SODDING OR SEEDING OF SIDE SLOPES SHALL BE INITIATED AS SOON AS PRACTICABLE IN PORTIONS OF THE SITE WHERE CONSTRUCTION ACTIVITIES HAVE TEMPORARILY OR PERMANENTLY CEASED, BUT IN NO CASE SHALL THE TIME BE GREATER THAN 14 DAYS AFTER THE CONSTRUCTION ACTIVITY TEMPORARILY OR PERMANENTLY CEASED.

11. THE CONTRACTOR SHALL BE RESPONSIBLE FOR MAINTENANCE AND REPAIRS OF EROSION AND SEDIMENT CONTROL DEVICES, AND REMOVAL OF EROSION AND SEDIMENT CONTROL DEVICES WHEN NOTICE OF TERMINATION IS MAILED.

12. INSTALLATION, MAINTENANCE, REPAIR AND REMOVAL REQUIRED FOR THE CONTROL AND ABATEMENT OF EROSION AND WATER POLLUTION SHALL BE INCLUDED IN THE INDIVIDUAL COSTS OF THE EROSION CONTROL DEVICES.

13. STRUCTURAL PRACTICES - BUILT UP SEDIMENT WILL BE REMOVED FROM SILT FENCE AND STAKED TURBIDITY BARRIERS WHEN IT HAS REACHED ONE-HALF OF THE HEIGHT OF THE FENCE. SODDING WILL BE INSPECTED FOR BARE SPOTS, WASHOUTS, AND HEALTHY GROWTH. STABILIZED CONSTRUCTION ENTRANCES SHALL BE MAINTAINED TO PREVENT CLOGGING OF ROCK BEDDING WHICH MAY IMPEDE THE USEFULNESS OF THE STRUCTURE.

14. EROSION CONTROL SHOWN ON THESE PLANS ARE MINIMUM REQUIREMENTS. CONTRACTOR IS RESPONSIBLE FOR ALL EROSION CONTROL MEASURES PER ALL REGULATORY AGENCIES.

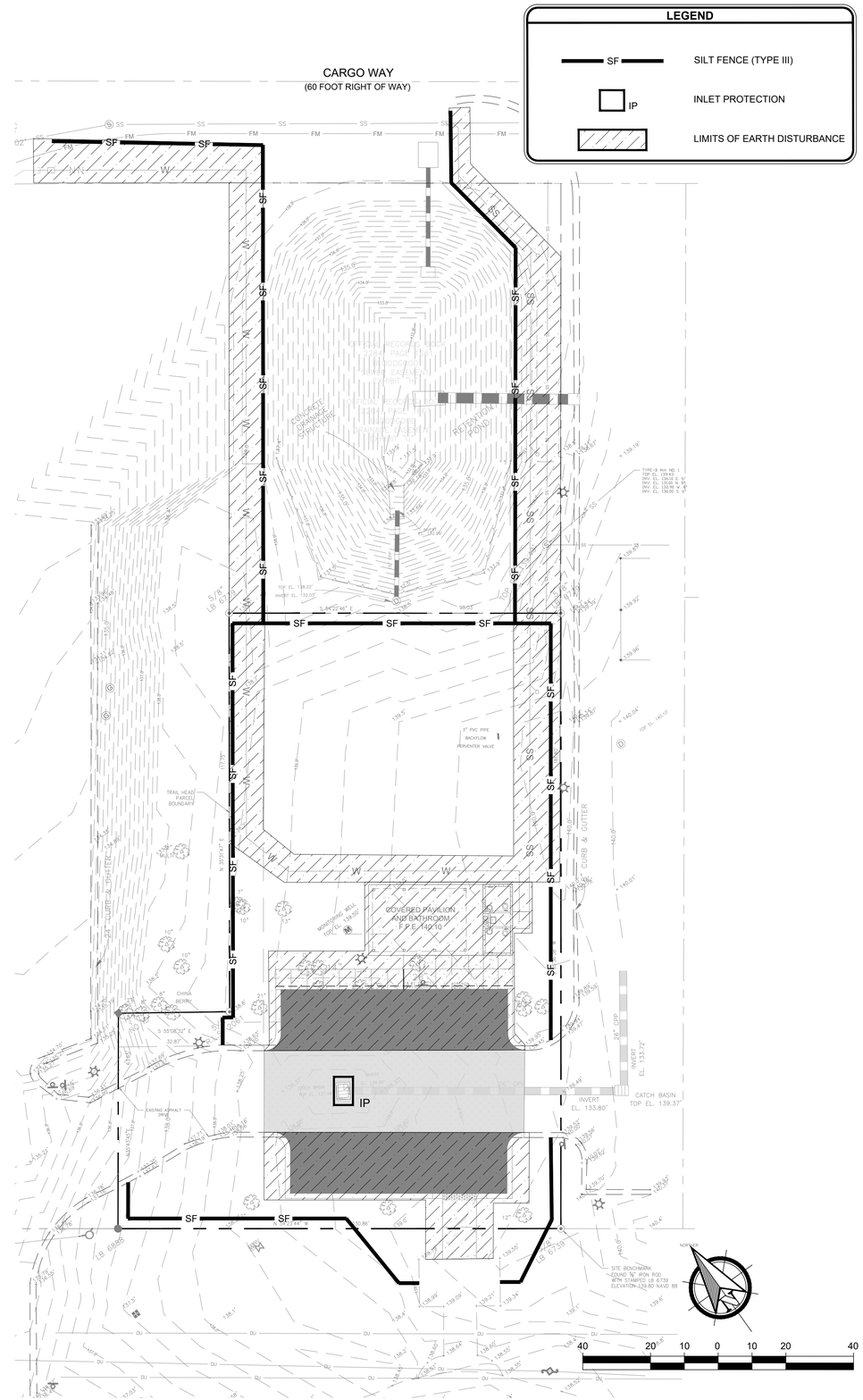

CITY OF KEYSTONE HEIGHTS
"IN GOD WE TRUST"

Michael Baker INTERNATIONAL
12740 GRAN BAY PARKWAY WEST
SUITE 2110, JACKSONVILLE, FLORIDA 32258
(904) 380-2500
CORPORATE LICENSE NUMBER 00004307

Designer: DB	Checked by: TS
Technician: DL	Baker Project No: 175439

Seal:

Keymap/Notes:

REVISIONS

No.	Description	Date	By

Project Name:

CITY OF KEYSTONE HEIGHTS TRAIL HEAD

Drawing Name:

STORMWATER POLUTION PREVENTION PLAN

BID DOCUMENTS

ENGINEER OF RECORD

Date: MARCH 2020	Drawing Number: C-100
Scale: AS SHOWN	

Plotted on: 3/16/2020 12:15 PM By:Langford, Donald
Located: Y:\Projects\1-Local Govt Projects\Keystone Heights\2018-01 CES Keystone Heights\175439 - COKH Trail Head\03-DESIGN\A. CIVIL CADD\(01) - 175439 - C100 - SWPPP.dwg

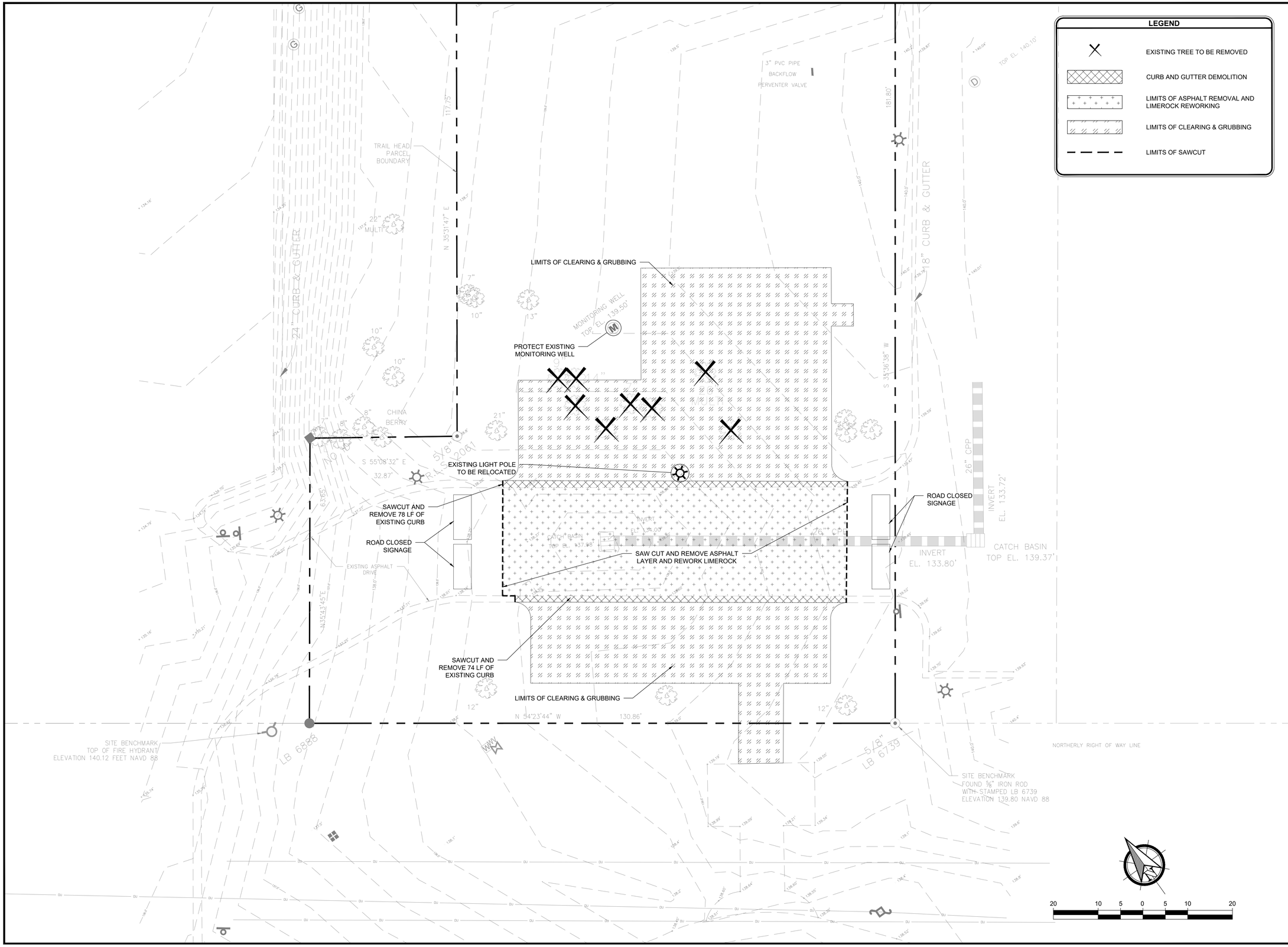

LEGEND

- EXISTING TREE TO BE REMOVED
- CURB AND GUTTER DEMOLITION
- LIMITS OF ASPHALT REMOVAL AND LIMEROCK REWORKING
- LIMITS OF CLEARING & GRUBBING
- LIMITS OF SAWCUT

CITY OF KEYSTONE HEIGHTS "IN GOD WE TRUST" SINCE 1925

Michael Baker INTERNATIONAL
12740 GRAN BAY PARKWAY WEST
SUITE 2110, JACKSONVILLE, FLORIDA 32258
(904) 380-2500
CORPORATE LICENSE NUMBER 00004307

Designer: DB	Checked by: TS
Technician: DL	Baker Project No: 175439

Seal:

Keymap/Notes:

REVISIONS

No.	Description	Date	By

Project Name:

CITY OF KEYSTONE HEIGHTS TRAIL HEAD

Drawing Name:

DEMOLITION PLAN

BID DOCUMENTS

ENGINEER OF RECORD

Date: MARCH 2020

Scale: AS SHOWN

Drawing Number: C-102

Plotted on: 3/16/2020 12:16 PM By:Langford, Donald
Located: Y:\Projects\1-Local Govt Projects\Keystone Heights\2018-01 CES Keystone Heights\175439 - COKH Trail Head\03-DESIGN\A. CIVIL CADD\(01) - 175439 - C102 - Demolition Plan.dwg

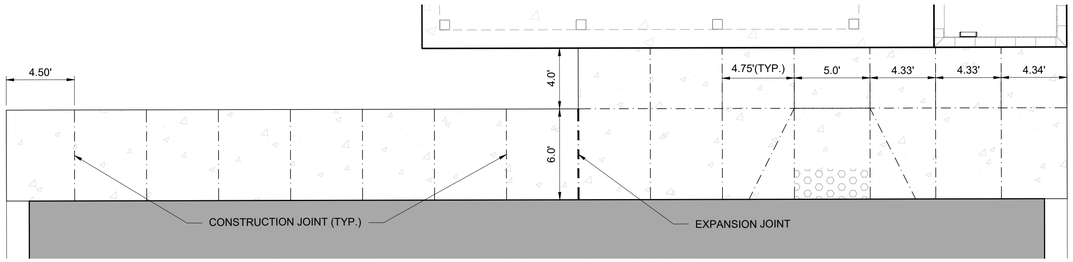

CONCRETE SIDEWALK JOINT PLAN

SCALE: 1" = 5'

LEGEND

- PROPOSED ASPHALT & REWORKED LIMEROCK
- PROPOSED CONCRETE
- PROPOSED FULL DEPTH ASPHALT PAVEMENT

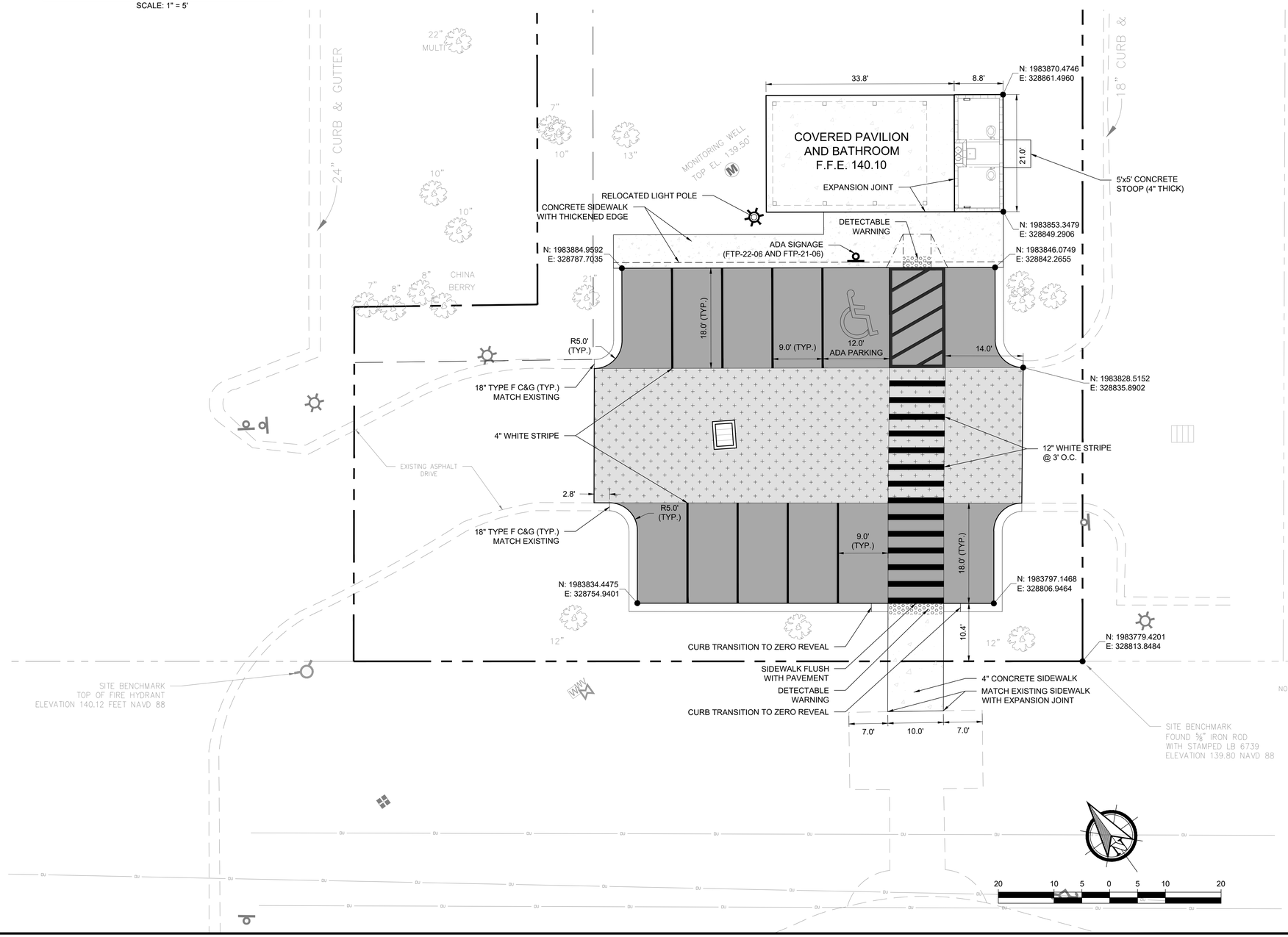

CITY OF KEYSTONE HEIGHTS "IN GOD WE TRUST" SINCE 1925

Michael Baker INTERNATIONAL
12740 GRAN BAY PARKWAY WEST
SUITE 2110, JACKSONVILLE, FLORIDA 32258
(904) 380-2500
CORPORATE LICENSE NUMBER 00004307

Designer: DB	Checked by: TS
Technician: DL	Baker Project No: 175439

Seal:

Keymap/Notes:

REVISIONS

No.	Description	Date	By

Project Name:

CITY OF KEYSTONE HEIGHTS TRAIL HEAD

Drawing Name:

STAKING PLAN

ENGINEER OF RECORD

Date: MARCH 2020

Scale: AS SHOWN

Drawing Number: C-200

Plotted on: 3/16/2020 12:16 PM By:Langford, Donald
Located: Y:\Projects\1-Local Govt Projects\Keystone Heights\2018-01 CES Keystone Heights\175439 - COKH Trail Head\03-DESIGN\A. CIVIL CADD\(02) - 175439 - C200 - Staking Plan.dwg

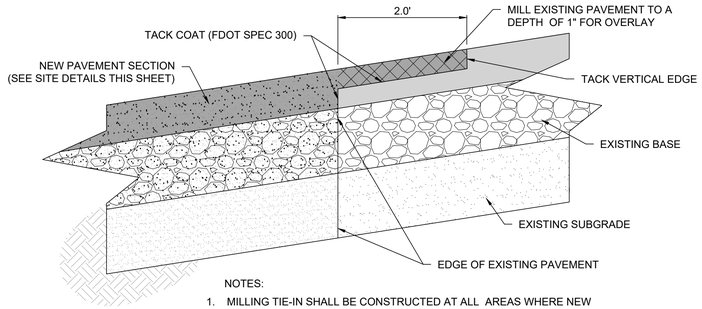

NOTES:

1. MILLING TIE-IN SHALL BE CONSTRUCTED AT ALL AREAS WHERE NEW PAVEMENT IS BEING INSTALLED ADJACENT TO EXISTING ASPHALT.
2. LIMITS OF MILLING ARE AS NOTED IN DETAIL UNLESS OTHERWISE NOTED IN PLANS.

ASPHALT TIE-IN DETAIL

N.T.S.

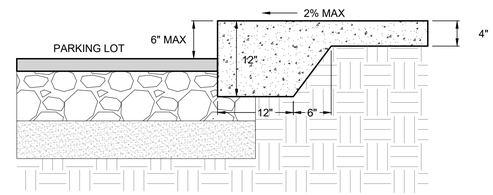

THICKENED EDGE DETAIL FOR SIDEWALK PAVEMENT

N.T.S.

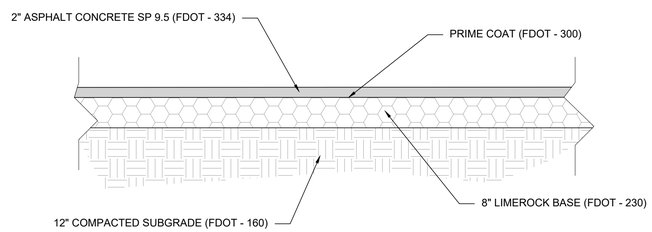

ASPHALT PAVEMENT DETAIL

N.T.S.

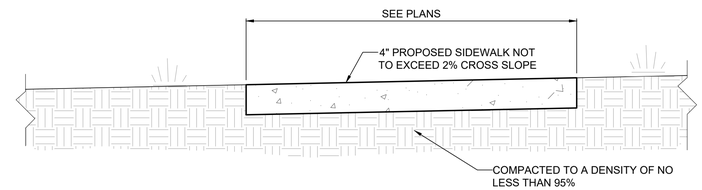

NOTES:

1. TRANSVERSE EXPANSION JOINTS TO BE A MAXIMUM OF 50 FEET.
2. ALL CONCRETE TO BE 3000 PSI AND FINISHED WITH CURING COMPOUND.
3. A 6 INCH DEPTH IS REQUIRED AT LOCATIONS OF DRIVEWAY CROSSINGS, AT STREET INTERSECTIONS (ALONG THE LENGTH OF RADIUS OF CURB RETURNS), AND IN THE HANDICAP RAMPS

CONCRETE SIDEWALK DETAIL

N.T.S.

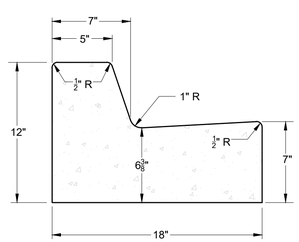

18" CURB AND GUTTER

N.T.S.

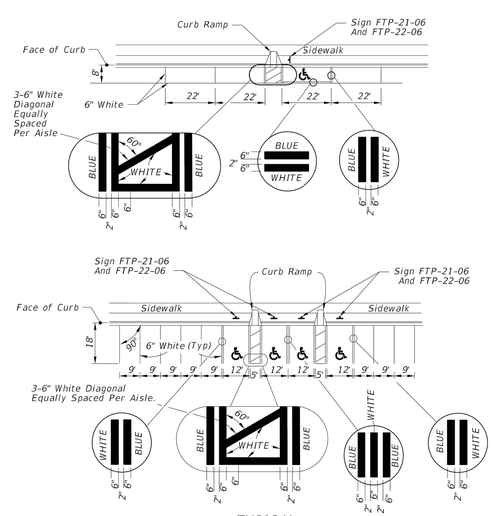

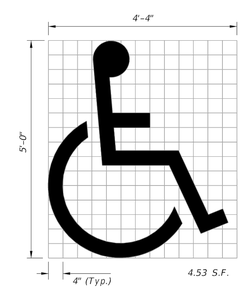

(See Note 6)

UNIVERSAL SYMBOL OF ACCESSIBILITY

NOTES:

1. Dimensions are to the centerline of markings.
2. An Access Aisle is required for each accessible space when angle parking is used.
3. Criteria for pavement markings only, not public sidewalk curb ramp locations. For ramp locations refer to plans.
4. Tint blue pavement markings to match color 15180 of Federal Standards 595a.
5. Mount FTP-22-06 sign below the FTP-21-06 sign.
6. Use of the pavement symbol in accessible parking spaces is optional. When pavement symbol is used, the symbol is either 3'-0" or 5'-0" high and white in color.

CITY OF KEYSTONE HEIGHTS
"IN GOD WE TRUST"
SINCE 1925

Michael Baker INTERNATIONAL
12740 GRAN BAY PARKWAY WEST
SUITE 2110, JACKSONVILLE, FLORIDA 32258
(904) 380-2500
CORPORATE LICENSE NUMBER 00004307

Designer: DB	Checked by: TS
Technician: DL	Baker Project No: 175439

Seal:

Keymap/Notes:

REVISIONS

No.	Description	Date	By

Project Name:

CITY OF KEYSTONE HEIGHTS TRAIL HEAD

Drawing Name:

SITE DETAILS

BID DOCUMENTS

ENGINEER OF RECORD

Date: MARCH 2020

Scale: AS SHOWN

Drawing Number: C-201

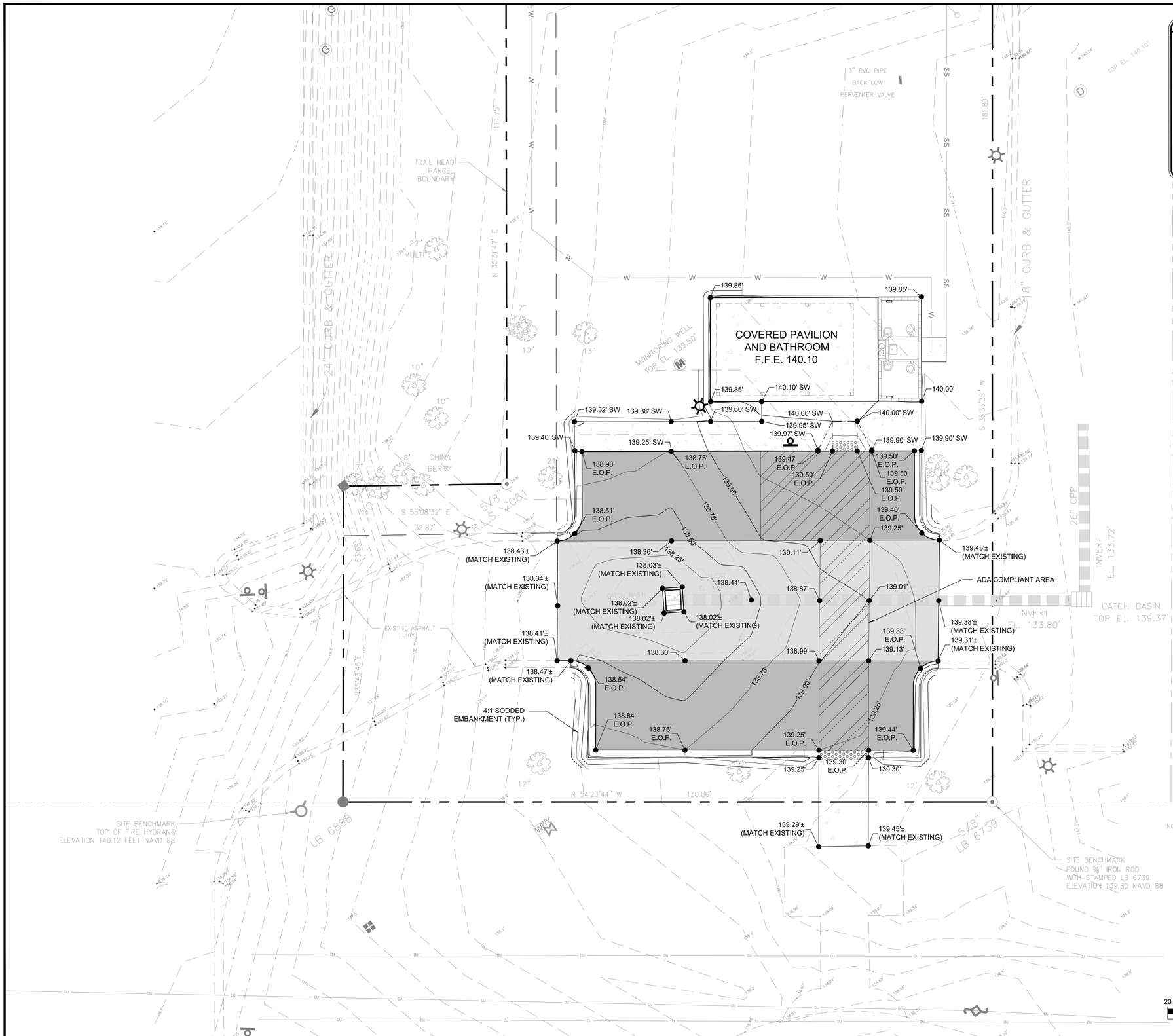

LEGEND

- PROPOSED FULL DEPTH ASPHALT PAVEMENT
- PROPOSED CONCRETE
- PROPOSED ASPHALT & REWORKED LIMEROCK
- 140.15' PROPOSED SPOT ELEVATIION

CITY OF KEYSTONE HEIGHTS
"IN GOD WE TRUST"
SINCE 1925

Michael Baker
INTERNATIONAL
12740 GRAN BAY PARKWAY WEST
SUITE 2110, JACKSONVILLE, FLORIDA 32258
(904) 380-2500
CORPORATE LICENSE NUMBER 00004307

Designer: DB	Checked by: TS
Technician: DL	Baker Project No: 175439

Seal:

Keymap/Notes:

REVISIONS

No.	Description	Date	By

Project Name:

CITY OF
KEYSTONE HEIGHTS
TRAIL HEAD

Drawing Name:

GRADING &
DRAINAGE PLAN

BID DOCUMENTS

ENGINEER OF RECORD

Date: MARCH 2020	Drawing Number: C-300
Scale: AS SHOWN	

Plotted on: 3/16/2020 12:17 PM By:Langford, Donald
Located: Y:\Projects\1-Local Govt Projects\Keystone Heights\2018-01 CES Keystone Heights\175439 - COKH Trail Head\03-DESIGN\A. CIVIL CADD\(03) - 175439 - C300 - Grading Plan.dwg

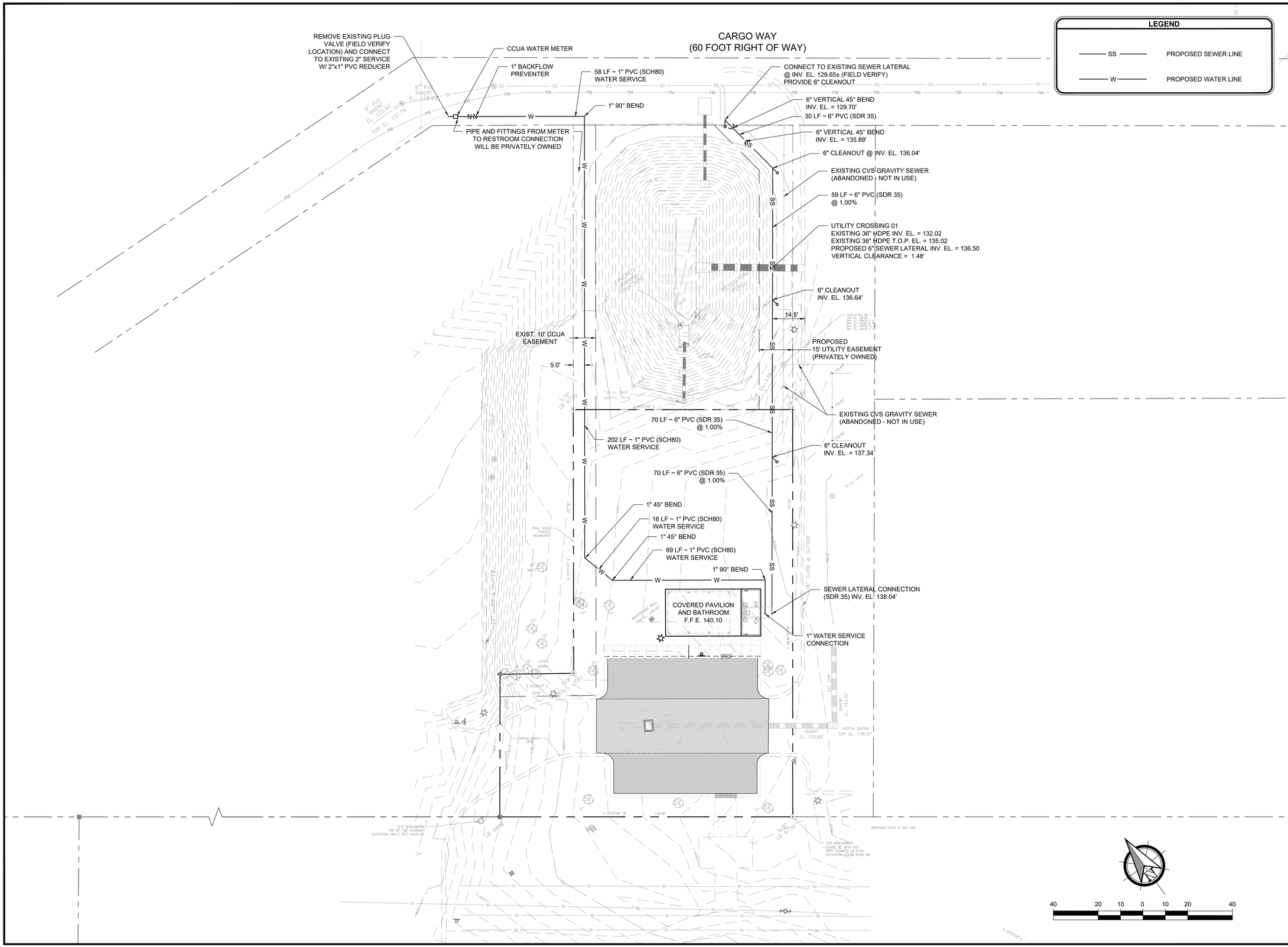

LEGEND

SS	PROPOSED SEWER LINE
W	PROPOSED WATER LINE

CITY OF KEYSTONE HEIGHTS
"IN GOD WE TRUST"
SINCE 1925

Michael Baker INTERNATIONAL
12740 GRAN BAY PARKWAY WEST
SUITE 2110, JACKSONVILLE, FLORIDA 32258
(904) 380-2500
CORPORATE LICENSE NUMBER 00004307

Designer: DB	Checked by: TS
Technician: DL	Baker Project No: 175439

Seal:

Keymap/Notes:

REVISIONS

No.	Description	Date	By

Project Name:

CITY OF KEYSTONE HEIGHTS TRAIL HEAD

Drawing Name:

UTILITY PLAN

BID DOCUMENTS

ENGINEER OF RECORD

Date: MARCH 2020

Scale: AS SHOWN

Drawing Number: C-400

Plotted on: 3/16/2020 12:17 PM By:Langford, Donald
Located: Y:\Projects\1-Local Govt Projects\Keystone Heights\2018-01 CES Keystone Heights\175439 - COKH Trail Head\03-DESIGN\A. CIVIL CADD\(04) - 175439 - C400 - Utility Plan.dwg

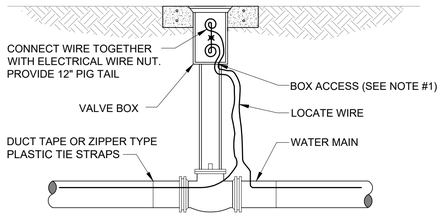

LOCATE WIRE BOX UTILIZING VALVE BOX

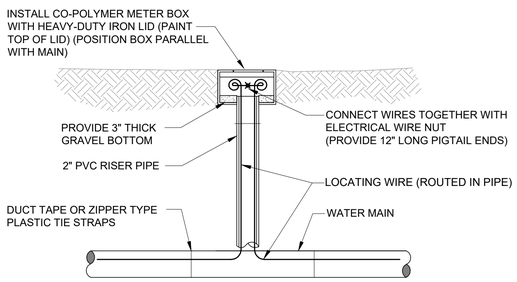

LOCATE WIRE BOX UTILIZING METER BOX

NOTES

1. LOCATE WIRE SHALL ENTER THE VALVE BOX THROUGH A "V" CUT IN THE 6" PVC RISER PIPE.

LOCATE WIRE BOX

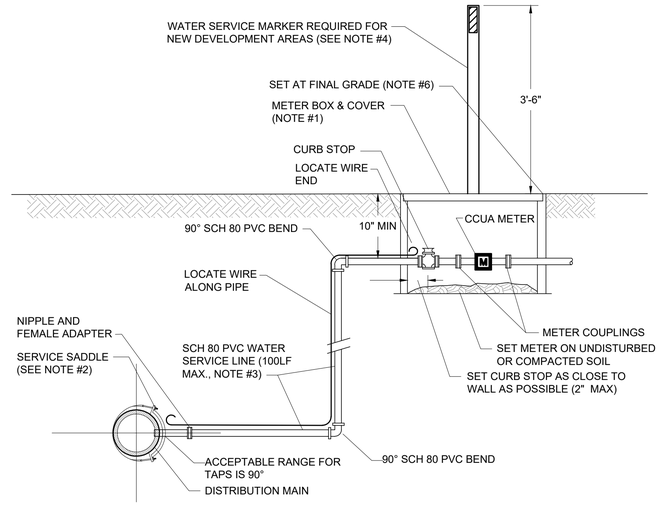

NOTES

1. SEE CCUA APPROVED MATERIALS MANUAL AND SYSTEM DETAILS FOR REQUIREMENTS.

2. SINGLE BAND SADDLES MAYBE UTILIZED ON NEW 1" WATER SERVICES WHICH ARE INSTALLED ON A DRY 10" SIZE OR SMALLER WATER MAIN (NEW WATER MAIN CONSTRUCTION). FOR WET TAPS OR WATER MAINS 12" SIZE AND LARGER, A DOUBLE BAND SADDLE IS REQUIRED.

3. NO OPEN CUT UNDER ROADWAY PAVING ALLOWED UNLESS THE ROADWAY IS BEING RECONSTRUCTED OR IF DIRECTED OTHERWISE BY CCUA. CONSTRUCT SCH 80 PVC LINE WITH 36" (MIN.) COVER UNDER ROADWAYS. THE SCH 80 PVC WATER SERVICE LINE SHALL BE SAME SIZE AS THE METER (3/4" MINIMUM) AND BE INSTALLED PERPENDICULAR TO THE MAIN AND NOT EXCEED 100LF UNLESS OTHERWISE APPROVED BY CCUA.

4. INSTALL PVC PLUG IN ALL CURB STOPS IF WATER SERVICE IS "NOT IN USE" (I.E.: IF NO METER IS INSTALLED). IN ADDITION, INSTALL A 6', 6" P.T. FENCE POST (TOP PAINTED BLUE) 12" OFF SIDE OF METER BOX. THE REMOVAL OR TRANSFER OF A WATER SERVICE SHALL INCLUDE BRASS METER COUPLINGS (HEX ON BARREL TYPE).

5. THE CONTRACTOR SHALL BE RESPONSIBLE FOR THE REPAIR OR REPLACEMENT OF THE METER OR ELECTRONIC DEVICES IF DAMAGED BY THE CONTRACTOR DURING THE CONSTRUCTION PERIOD.

6. METER BOX AND TOP SHALL BE CLEAR OF ALL DEBRIS TO ALLOW FULL ACCESS TO BOX (I.E., NO DIRT, TRASH OR OTHER DEBRIS PLACED ON TOP OF BOX).

7. LOCATE WIRING REQUIRED ON ALL SERVICES 10' OR GREATER IN LENGTH / OFFSET GREATER THAN 2.0".

SCH 80 PVC WATER SERVICE DETAIL
2" AND SMALLER METER

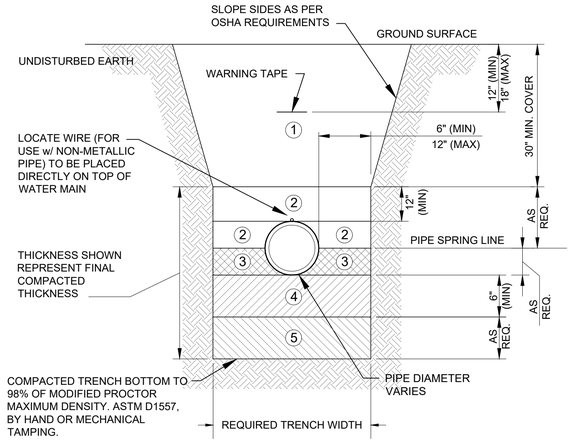

1. FINAL BACKFILL - CLEAN, WELL GRADED MATERIAL IN ACCORDANCE WITH THE REQUIREMENTS OF THE CONTRACT SPECIFICATIONS. FINAL BACKFILL SHALL BE INSTALLED IN LIFTS NOT EXCEEDING 6 INCHES, LOOSE MEASUREMENT, AND SHALL BE COMPACTED TO AT LEAST 95% (UNPAVED) AND 98% (PAVED) MODIFIED PROCTOR MAXIMUM DRY DENSITY, ASTM D-1557.

2. INITIAL BACKFILL - CLEAN, WELL GRADED MATERIAL IN ACCORDANCE WITH THE REQUIREMENTS OF THE CONTRACT SPECIFICATIONS. INITIAL BACKFILL SHALL BE INSTALLED IN LIFTS NOT EXCEEDING 6 INCHES, LOOSE MEASUREMENT, AND SHALL BE COMPACTED TO AT LEAST 98% MODIFIED PROCTOR MAXIMUM DRY DENSITY, ASTM D-1557. BACKFILL SHALL EXTEND TO THE TOP OF THE PIPE AFTER COMPACTION. ALL LIFTS SHALL BE COMPACTED BY HAND TAMPING OR AN APPROVED METHOD OF MECHANICAL TAMPING. DEWATERING SHALL CONTINUE UNTIL BACKFILL IS COMPACTED AT LEAST 2 FEET ABOVE PIPE.

3. HAUNCHING - CLEAN, WELL GRADED MATERIAL IN ACCORDANCE WITH THE REQUIREMENTS OF THE CONTRACT SPECIFICATIONS. HAUNCHING SHALL BE INSTALLED IN COMPLETELY DEWATERED TRENCHES IN LIFTS NOT EXCEEDING 4 INCHES, LOOSE MEASUREMENT, AND SHALL BE COMPACTED TO AT LEAST 98% MODIFIED PROCTOR MAXIMUM DRY DENSITY, ASTM D-1557, BY HAND TAMPING. HAUNCHING SHALL BE BROUGHT UP EQUALLY ON BOTH SIDES OF THE PIPE. COMPACT BACKFILL TO MID-PIPE.

4. BEDDING - CLEAN, WELL GRADED MATERIAL IN ACCORDANCE WITH THE REQUIREMENTS OF THE CONTRACT SPECIFICATIONS. BEDDING SHALL BE INSTALLED IN COMPLETELY DEWATERED TRENCHES IN LIFTS NOT EXCEEDING 6 INCHES, LOOSE MEASUREMENT, AND SHALL BE COMPACTED TO AT LEAST 98% MODIFIED PROCTOR MAXIMUM DRY DENSITY, ASTM D-1557, BY HAND TAMPING OR MECHANICAL TAMPING. PROPERLY SHAPED BELL HOLES SHALL BE EXCAVATED IN THE COMPACTED BEDDING TO PERMIT ASSEMBLY OF THE PIPE. SEE SPECIFICATIONS FOR UNSUITABLE MATERIALS EXCAVATION IF REQUIRED. TRENCH BOTTOM IS AT BOTTOM OF PIPE IF UNSUITABLE MATERIAL IS NOT ENCOUNTERED.

NOTE: NATIVE, UNDISTURBED MATERIAL IN COMPLETELY DEWATERED TRENCHES MEETING THE COMPACTION AND MATERIAL REQUIREMENTS FOR COMPACTED BEDDING MATERIAL NEED NOT BE REPLACED OR REWORKED, EXCEPT FOR SHAPING OF BELL HOLES, AND WHERE REFILL IS REQUIRED.

5. REFILL - REQUIRED WHERE TRENCH HAS BEEN OVER-EXCAVATED. REFILL SHALL BE INSTALLED IN COMPLETELY DEWATERED TRENCHES IN LIFTS NOT EXCEEDING 6 INCHES AND SHALL BE COMPACTED TO 98% OF ASTM D-1557 MAX DRY DENSITY, BY HAND OR MECHANICAL TAMPING.

TYPICAL PIPE TRENCH DETAIL (NTS)

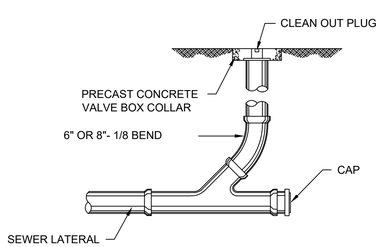

CLEANOUT DETAIL
N.T.S.

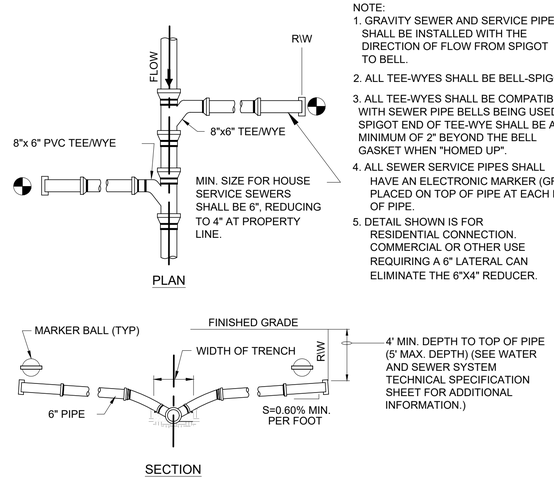

NOTE:
1. GRAVITY SEWER AND SERVICE PIPE SHALL BE INSTALLED WITH THE DIRECTION OF FLOW FROM SPIGOT TO BELL.
2. ALL TEE-WYES SHALL BE BELL-SPIGOT.
3. ALL TEE-WYES SHALL BE COMPATIBLE WITH SEWER PIPE BELLS BEING USED. SPIGOT END OF TEE-WYE SHALL BE A MINIMUM OF 2" BEYOND THE BELL GASKET WHEN "HOMED UP".
4. ALL SEWER SERVICE PIPES SHALL HAVE AN ELECTRONIC MARKER (GREEN) PLACED ON TOP OF PIPE AT EACH END OF PIPE.
5. DETAIL SHOWN IS FOR RESIDENTIAL CONNECTION. COMMERCIAL OR OTHER USE REQUIRING A 6" LATERAL CAN ELIMINATE THE 6"X4" REDUCER.

STANDARD SINGLE SEWER SERVICE LATERALS
N.T.S.

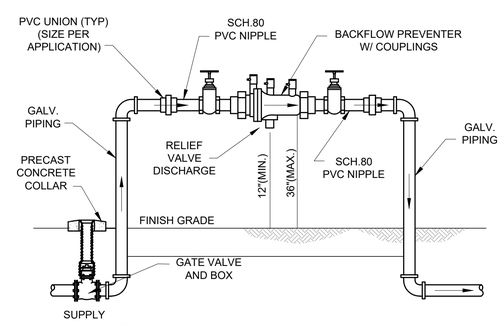

REDUCED PRESSURE BACKFLOW PREVENTER 2" DIAMETER AND SMALLER (NTS)
N.T.S.

Michael Baker INTERNATIONAL
12740 GRAN BAY PARKWAY WEST
SUITE 2110, JACKSONVILLE, FLORIDA 32258
(904) 380-2500
CORPORATE LICENSE NUMBER 00004307

Designer: DB	Checked by: TS
Technician: DL	Baker Project No: 175439

Seal:

Keymap/Notes:

REVISIONS

No.	Description	Date	By

Project Name:
CITY OF KEYSTONE HEIGHTS TRAIL HEAD

Drawing Name:
UTILITY DETAILS

BID DOCUMENTS

ENGINEER OF RECORD

Date: MARCH 2020	Drawing Number: C-401
Scale: AS SHOWN	

OUTLINE SPECIFICATIONS FOR CONSTRUCTION OF SEWAGE COLLECTION SYSTEM

01. INTENTION. It is the declared and acknowledged intention to secure a new sewerage system, complete, in accordance with the plans, specifications, and contract documents. All new work shall be in accordance with Clay County Utility Authority Specifications and Details and with Clay County Utility Authority Approved Materials Manual and Clay County Engineering Department Details and Specifications and any other Government Regulatory Agency. All work shall conform to the above, whether or not specifically called out or noted on the plans.

02. GENERAL. All materials shall be of those listed in the CCUA Approved Materials Manual. The installation shall be warranted by the Contractor as to materials, workmanship and accuracy of the As-built drawings for a period of two years from the date of completion of the work or beneficial use of the facilities. Workmanship shall be of good quality; i.e., sewers shall be laid true to line and grade, fittings shall be properly installed and restrained, trenches shall be properly excavated and backfilled, manholes shall be installed at locations and to elevations shown on the plans.

02.1 Contractor LICENSE AND APPROVAL. Utility reserves the right to approve or deny approval of Contractor prior to construction of any on-site or off-site utility facilities. Contractor must hold a State Of Florida Underground Utility Contractors license, that named contracting company being the one doing the work on project, and demonstrate acceptable experience in the field of utility construction.

03. SURVEYS. The Utility Contractor shall provide all surveys necessary for the layout and construction of the work of his contract.

04. EARTHWORK. Earthwork shall include all excavation, fill and backfill (hand/machine), compaction and rough grading of materials encountered. No unsuitable materials clay, muck, or peat removed from pipe trenches are to be used for backfill. All fill or backfill shall be either sand or sandy clay, free of roots, trash or other debris. All backfill alongside of and to a height twenty-four inches above all pipe shall be free of clay or organic material, compacted in lifts, the first of which shall be to the spring line of the pipe by either hand or machine operation carefully to 98%. All other backfill shall be compacted by either hand or machine operation carefully to 95% (outside of paving), 98% (under paving) of its optimum moisture content as determined by ASTM D698, latest. Copies of compaction density test reports from a licensed testing agency shall be made available to CCUA if requested.

05. MANHOLES. Manhole bases, sections, and cones shall conform to the requirements of ASTM C478, Specifications for Precast Reinforced Concrete Manhole Sections. Cement shall meet the requirements of ASTM C150, Specifications for Portland Cement, Type II. Concrete shall meet the minimum requirements for Class "A" Concrete Work. Minimum wall thickness shall be 1/12 the inside diameter in inches plus one (1) inch. Bases for manholes shall be cast integrally with the bottom manhole section. Joint contact surfaces shall be formed with machined castings; they shall be exactly parallel with a 2 degree slope and nominal 1/16 inch clearance with the tongue equipped with a proper recess for the installation of an O-ring rubber gasket, conforming to ASTM C443, Joints for circular Concrete sewer and Culvert pipe using Rubber gasket, or RAM-NEK premolded Plastic Joint Sealer with joints Manhole adjustment materials shall be sound, hard, and pre-primed. Precast concrete adjustment rings as manufactured by Taylor Precast Co. (or equal) may be utilized in lieu of brick adjustment. Field mixed mortar for brick shall be composed of portland cement Type II, sand and clean water. Mortar shall be one part cement Type II and two parts sand; lime shall not be used. The outside faces of brick masonry shall be plastered with mortar from 1/4" to 3/8" thick. Precast manhole walls shall not be coated unless otherwise noted. Cement grout for manhole bottoms shall be a stiff rich mix of Type II Portland Cement and sharp plaster sand. Calcium chloride may be added (maximum of 2%) to aid in obtaining a faster set. At permanent pump station locations, the first upstream manhole from the station shall be lined with a polyethylene liner as manufactured and installed by Taylor Precast Co., or approved equal.

05.1 CAST IRON MANHOLE FRAMES AND COVERS. Cast iron manhole frames and covers shall be as detailed on drawings. Castings shall meet the requirements of ASTM A48, Specifications for Gray Iron Castings, Class No. 30, or Grade 65-45-12, Ductile Iron meeting the requirements of ASTM A536, Standard Specification for Ductile Iron Castings. In either case, manhole frame and cover shall be designed to withstand an HS20-44 loading defined in the AASHTO Specifications. Frames and covers shall be machined or ground at touching surfaces so as to seat firmly and prevent crocking.

05.2 FLEXIBLE MANHOLE CONNECTOR. All connections between sewer pipe and pre-cast concrete manholes shall be accomplished by a Flexible Connector, "Kor-N-Seal", as manufactured by National Pollution Control Systems, Inc., or approved equal.

05.3 FLOW CHANNELS. Flow channels in manhole base shall be formed of D.O.T. Class I Type II cement grout with brick and trowel to a smooth surface finish. Grout surface shall be 1" min. thickness over brick or rubble. While the manholes are under construction, cut off pipes at inside face of the manhole and construct the invert to the shape and sizes of pipe indicated.
All inverts shall provide a constant gradient from influent pipe to effluent pipe through manhole. Changes in direction of the sewer and entering branch or branches shall be laid out in smooth curves of the longest possible radius which is tangent to the center lines of adjoining pipelines.

05.4 DROP INLETS. Where shown on the drawings, drop inlets to the manholes shall be constructed as shown on the drawings and specified herein.

06. POLYVINYL CHLORIDE PIPE. Polyvinyl Chloride Sewer Pipe shall conform to the requirements of ASTM D-3034, SDR 26. The PVC compound conforming to ASTM D-1784. Pipe shall be early marked in 5 ft. intervals or less, indicating Manufacturers name, nominal size, cell classification and legend. Joints shall be push-on rubber gasketed, conforming to ASTM 3212. Pipe and fittings shall be installed in accordance with recommended practice ASTM D-2321. All pipe and sewer fittings shall be SDR-26 heavy wall, installed up to a depth of 13' from finish grade to invert of pipe. Maximum depth of gravity sewer without prior approval shall be 13 feet. Sewer pipe and fittings over 13' in depth shall be DR-18 P.V.C. Design of sewer installation over 13' in depth shall have CCUA's prior approval.

07. PIPE BETWEEN MANHOLES. All piping installed between manholes shall be the same material and class. No dissimilar pipe material will be allowed anywhere within a single run of pipe.

08. SANITARY SERVICE LATERALS. Sanitary service laterals shall be Polyvinyl Chloride Pipe conforming to the requirements of ASTM D-3034, SDR 26 where cover over top of pipe is 36 inches or greater. Where cover over top of pipe is less than 36 inches, specific construction conditions shall be directed by the Clay County Utility Authority. All sanitary service laterals shall be a minimum of 4'-0" deep at the right-of-way line to top of pipe. Any sanitary service lateral which must be more than 6'-0" deep shall not be installed prior to obtaining permission from the CCUA field inspector or CCUA Engineering Department. All sanitary service laterals shall be 6-inch diameter from the main to the right-of-way line with a minimum slope of 0.60% (0.6 feet per hundred feet). In single family residential developments, services shall reduce to 4" in size at the property line utilizing the proper fittings for the type of pipe specified. All sewer service laterals over 13' deep shall be constructed of DR-18 PVC pipe, and DR-18 pipe fittings, per CCUA standard sewer system details.

09. FORCE MAINS. Force mains shall be C900 DR-18 PVC and conform to the requirements of ASTM D-1784, D-2241, D-3139 and F-477. Pipe shall be color coded and marked "FORCE MAIN" on at least two sides and at every 12" along the barrel of the pipe. Ductile iron pipe for force main service shall be polylined. Ductile iron pipe is not to be used without prior approval of the Clay County Utility Authority. Fittings shall be C110 gray iron and shall be polylined. Force mains less than 3" shall be SCH80 PVC. All force mains shall be installed with tracer wire per CCUA standard location wire details. All force mains should be installed 5 feet to top of pipe, unless approved by CCUA.

09.1 LIFT STATION VALVES. See CCUA Approved Materials Manual for acceptable plug valves and check valves.

09.2 FORCE MAIN VALVE. Gate valve, resilient seated, same as specified in Water Distribution System Specifications Section 11 at right. Except valve bodies shall be gray iron. Valve box shall have the word "SEWER" cast into the cover.

09.3 FORCE MAIN JOINT RESTRAINT. All fittings shall be properly and adequately restrained against lateral movement at all force main tees, crosses, valves and bends. See CCUA Approved Materials Manual for acceptable restrainers. (SEE RESTRAINED JOINT SCHEDULE)

09.4 FORCE MAIN PIPE FLUSHING. All force main piping shall be flushed with clean water utilizing full pipe diameter. In cases where the water supply is inadequate to flush the full pipe diameter, flushing shall occur to the extent of the water supply that is available.

10. INSTALLATION. All sewer lines, manholes, and appurtenances shall be constructed to the dimensions and elevations indicated on the drawings. Trenches shall be excavated to a width approximately twelve inches greater than the outside diameter of the pipe. Machine excavation shall be to a depth one-fourth pipe diameter above proposed pipe grade; the remaining depth shall be hand excavated and shaped to give full support to the lower one-fourth of each pipe.
Each section of pipe shall be inspected for defects prior to being lowered into the trench. The inside of each bell and the outside of each spigot shall be thoroughly cleaned of all foreign matter prior to making the joint. All sewer lines shall be constructed with the spigot ends pointing in the direction of the flow. Both the bell and the spigot of each joint shall be lubricated with the lubricant recommended by the pipe Manufacturer. All sewer lines shall be cleaned of foreign matter as construction progresses, and shall be in a clean condition upon completion of construction operations. Pipe materials shall remain the same on runs between manholes and/or other structures.

11. INSPECTIONS. Each section of the completed sewer system shall be inspected for proper alignment. Any section of the sewer system which does not display true, concentric alignment shall be reinstalled at no additional expense to the Owner. A written log of inspection shall be kept indicating location of test, potential problems in sewer, dips and depth of water, service locations, and other irregularities in the pipe lines. An image in DVD format shall be made of the television inspection and submitted to the Engineer and the Clay County Utility Authority. Copies of compaction density test reports from a licensed testing agency shall be made available to CCUA if requested.

11.1 TELEVISION INSPECTIONS Television inspection will be required on all new gravity sewers constructed. This service shall be provided by the Contractor as a part of this Contract. The newly constructed sewers shall be televised in the presence of the Inspector of the Clay County Utility Authority. A full report as to the condition of pipe, type, depth, location of services, length, joint and distance between manholes, etc. shall be furnished to the CCUA inspector prior to the final acceptance of the system. Any pipe found to be cracked, leaking or otherwise defective shall be removed and replaced with new pipe at no additional costs to the Owner. Deflection testing with 5% mandrel also required. Any section not passing the mandrel test shall be corrected. Sewer mains shall be televised after curb and lime rock are in place but prior to paving. Curb and limerock shall be installed, finish graded prior to televising the gravity sewer. Limerock priming and paving operations shall not take place until the CCUA inspector has reviewed the television recorded DVD and approves the gravity sewer system. This will be strictly enforced. All gravity sewers must be flushed no sooner than 4 hours prior to any television inspection. Force main lines shall be pressure tested and approved prior to paving, but not prior to subgrade mixing operation and limerock installation, finish graded and compacted. Sewer services shall be viewed by a camera capable of viewing into service lateral connections. Adequate water must be placed within the upstream manhole to flow through the downstream manhole before inspecting with the camera. All work must be accomplished in the presence of the CCUA inspector. Contractor shall provide CCUA with a 48 hr. notice of intent to televise and inspect sewer main. CCUA inspector shall report to job site at the time specified by Contractor at the time of the call-in. CCUA inspectors will wait at the job site no more than one hour for the televising to begin before leaving the job site. Contractor shall reschedule televising giving CCUA 48 hrs. notice if the above occurs. Inspections start at manhole invert.

11.2 INFILTRATION TEST After completion, the sewers or sections thereof, shall be tested and gauged for infiltration. To check the amount of infiltration, the Contractor, at no added compensation over the contract price for the sewers, shall furnish, and install and maintain a V-notch sharp crested weir in a wood frame on the main sewers as directed by the Engineer. Maximum allowable infiltration shall be 50 gallons per mile, per inch of dia. of sewer per 24 hour day, at any time.

11.3 EXFILTRATION TEST In areas where ground water is not encountered in sewer construction, or it is desired to run exfiltration tests, the Contractor shall furnish and install all necessary materials, equipments, shall supply water, etc., and shall run exfiltration tests to determine acceptance of the sewer. The maximum allowable exfiltration shall be 50 gallons per mile per inch of diameter of sewer per 24 hour day at any time based on two foot minimum internal head.

11.4. A “dip” is defined as any water holding depth which is equal or greater than the minimum depth as listed below. There shall not be any more than 1 “dip” per 135 linear feet of sewer pipe installed. The defective pipe sections, or those dip/sections over the allowable limit, shall be removed and replaced (at no cost to CCUA). Each run of pipe, between two manholes, shall be evaluated independently for compliance. Any “dip” which is greater than the “maximum” “dip” depth listed below are not acceptable and shall be removed and replace at no cost to CCUA. Regardless of the number of “dips” in the line section, if, in the option of the CCUA inspector, the number and/or location of the “dips” is believed to create an unacceptable operating condition, then the defective pipe section(s) shall be removed and replaced at no cost to CCUA. Any deviation from these “dip” limitation must be approved by the CCUA Service Availability Manager.

12. Demarcation box shall be used as an isolation point between the wet well and the motor control center panel. All wiring between the motor control center and wet well shall be interconnected at this point. Install malleable seal off conduits at the demarcation box end, in conduits between the demarcation box and the MCC. All internal hardware including terminal strips, blocks and backplane shall be stainless steel.

12.1 Demarcation box shall be 24” wide, 24” tall and 12” deep nema 4x enclosure manufactured of 316 stainless steel. Enclosure shall have a hinged cover and removable backplane for terminal blocks. The box shall be mounted so that the cover faces away from the wet well.

12.2 Terminal blocks will need to be mounted for each wire passing through the demarcation box. Terminal strips will be rated at 600 volts, sized according to the load served. Antioxidant compound shall be used on all terminal connections, (nolox or equal). Nameplates as specified on the electrical standards sheet shall be provided at the terminal blocks to identify each circuit.

12.3 All wires including spares shall be identified with heat shrink labels. All control wires shall have spade lugs. Wires shall be 600 volt rated thhn/mtw/thhw.

13. SEPARATION OF WATER AND SEWER MAINS. Horizontal and vertical separation between potable water system mains and or appurtenances and sanitary or storm sewers, wastewater or storm water force mains, and reclaimed water mains shall be in accordance with Rule 62-555.314 FAC.

a. New or relocated underground water mains shall be laid to provide a horizontal distance of at least three feet between the outside of the water main and the outside of any existing or proposed storm sewer, storm water force main, reclaimed water main regulated under Part III of Chapter 62-610, F.A.C, or proposed vacuum-type sanitary sewer.

b. New or relocated, underground water mains shall be laid to provide a horizontal distance of at least six feet, and preferably ten feet, between the outside of the water main and the outside of any existing or proposed gravity- or pressure-type sanitary sewer, wastewater force main, or pipeline conveying reclaimed water not regulated under Part III of Chapter 62-610, F.A.C. The minimum horizontal separation distance between water mains and gravity-type sanitary sewers shall be reduced to three feet where the bottom of the water main is laid at least six inches above the top of the sewer.

c. New or relocated underground water mains crossing any existing or proposed gravity- or vacuum-type sanitary sewer or storm sewer shall be laid so the outside of the water main is at least six inches, and preferably 12 inches, above, or at least 12 inches below, the outside of the other pipeline. However, it is preferable to lay the water main above the other pipeline (see Crossing "A" as shown on detail sheet WAT-02).

d. New or relocated underground water mains crossing any existing or proposed pressure-type sanitary sewer, wastewater or storm water force main, or pipeline conveying reclaimed water shall be laid so the outside of the water main is at least 12 inches above or below the outside of the other pipeline. However, it is preferable to lay the water main above the other pipeline.

e. At the utility crossings described in paragraphs (c) and (d) above, one full length of water main pipe shall be centered above or below the other pipeline so the water main joints will be as far as possible from the other pipeline. Alternatively, at such crossings, the pipes shall be arranged so that all water main joints are at least three feet from all joints in vacuum-type sanitary sewers, storm sewers, storm water force mains, or pipelines conveying reclaimed water regulated under Part III of Chapter 62-610, F.A.C., and at least six feet from all joints in gravity- or pressure-type sanitary sewers, wastewater force mains, or pipelines conveying reclaimed water not regulated under Part III of Chapter 62-610, F.A.C.

14. NEW CONNECTION TO EXISTING MAIN. New connection to existing main in service shall be accomplished by the "wet tap" method utilizing full circle stainless steel tapping sleeve and mechanical joint tapping valve. Tapping sleeve shall be rated at 200 p.s.i., non-shock working pressure conforming to AWWA Standard C110, latest revision. Stainless steel tapping sleeves shall be from those listed in CCUA approved material manual. Tapping valve shall be mechanical joint on one end and standard flanged joint on other end. Valve shall conform to Section 09.2 of these specifications.

15. JOBSITE SAFETY. While on the job site, the Contractor shall at all times observe all Federal, State and local safety rules, regulations and laws. This includes, but is not limited to, confined spaces and excavation protection systems as per O.S.H.A. standards.

16. CCUA SHOP DRAWING AND SUBMITTAL PROCESS. A signed acknowledgment by the Contractor and the Material Supplier, on the "Shop Drawings and CCUA's Approved Materials List Form", that all materials will be in accordance with CCUA's Specifications, CCUA's Details and CCUA's Approved Materials Manual, is the only submittal CCUA will require for each item of materials with the following exception: any alternate materials requested by the Engineer; any materials not listed in the CCUA Materials Manual; and materials associated with pumping stations and plant installations. Those exceptions shall have an individual shop drawing submitted for CCUA's review and approval prior to any installation of said materials. This is CCUA's procedure and it does not preclude the Design Engineer from requiring additional submittals and shop drawings as he deems necessary for the project.

17. PUMP STATIONS (TEMPORARY OR PERMANENT). All pump stations shall be constructed in accordance with CCUA standards, rules and regulations and be approved by CCUA All work and materials shall meet the requirements of CCUA Standard Pump Station Details and Specifications or the plans, details and specifications for that specific pump station. A driveway shall be provided from the street (roadway) to within 2 feet of the pump station wetwell, minimum 10 feet wide x 6 inches thick 3,500 p.s.i. concrete. Submersible pump stations shall be fenced completely about the perimeter of the pump station site (location of the pump station site as noted on the plans), including gates and all other items required to make a completely fenced installation. The entire pump station site within the fenced area shall be covered with #57 stone, 6 inch thick minimum, placed over filter cloth.

18. Information shown on the Drawings as to the location of existing utilities has been prepared from the most reliable data available to the Engineer. The Contractor shall be responsible for requesting underground utility locates and shall assist the utility companies by every means possible to determine said locations and the locations of recent additions to the systems not shown. Extreme caution shall be exercised to eliminate any possibility of any damage to utilities resulting from Contractor's activities. The locations of all overhead utilities shall also be verified by the Contractor. The Engineer shall be notified of any conflict that may occur. The Contractor shall be responsible for determining which poles will need shoring during excavation and shall provide such shoring and support as required.

19. CCUA details and specifications (latest available copy) shall be included in all plans submitted for work within the CCUA utility system. No person shall modify, change, omit, or replace any portion of those details and specifications without the express written consent of CCUA. In any instance where the Design Engineer has included his written specifications or details in the plans then the more stringent of the two shall govern.

20. All materials to be used for any project within CCUA'S utility system shall conform to those materials listed in the CCUA approved material manual in effect at the time final plans for that project are approved by CCUA

21. Under no circumstance shall any trees be planted within a CCUA utility easement without:
a. CCUA approving landscape and irrigation plans.
b. CCUA being notified prior to the planting of trees and giving approval.
c. CCUA inspecting the installation of root barrier material (required at all trees which are closer than 7.5' to any CCUA utility line) as shown in CCUA approved material manual and CCUA roadway cross section details, whether or not shown on the plans.

22. At all Jack & Bore locations a CCUA inspector shall inspect the casing spacers to verify they are the correct size and have been installed correctly on the pipe prior to the pipe being installed into the pipe casing. The pipe casing shall be clean and free of all dirt, and shall be cleaned with a Vac-Con if necessary. A CCUA inspector shall be present at all time during this work. Contractor shall be responsible to establish the correct elevation of the Jack and Bore carrier pipe and pipe casing. Contractor shall compact the bottom of the excavation to assure the density of earth is adequate to prevent any settlement of equipment used to perform the Jack and Bore operation. Contractor shall, at all Jack and Bore pits, provide and utilize the necessary de-watering equipment to keep the excavation dry and free from water in accordance with Paragraph 7 of the General Notes. Contractor shall, at all Jack and Bore excavations, provide a rock bed of #57 stone (a minimum of 8-inches thick) to support the track and rail system of the Jack and Bore equipment. This shall be inspected by a CCUA inspector and approved by the inspector prior to beginning the placement of the pipe casing. Contractor shall replace, at his/her expense, any Jack and Bore installed which CCUA refuses to accept for Ownership and which does not meet the requirements of CCUA, due to incorrect grading, damaged or faulty materials, poor workmanship, or anything that CCUA deems as inadequate to perform its intended use.

OUTLINE SPECIFICATIONS FOR CONSTRUCTION OF WATER DISTRIBUTION SYSTEM

01. INTENTION. It is the declared and acknowledged intention to secure a new water distribution system, complete, in accordance with the plans and specifications, and contract documents. All new work shall be in accordance with Clay County Utility Authority Specifications and Details and Approved Materials Manual and Clay County Engineering Department Details and Specifications and any other Government Regulatory Agency. All work shall conform to the above whether or not specifically called out or noted on the plans.

02. GENERAL. All materials shall be in conformance to National Sanitation Foundation (NSF) 61 and those listed in the CCUA Approved Materials Manual. Materials shall be warranted by the Contractor as to materials, workmanship and accuracy of As-built drawings for a period of two years from the date of completion of the work or beneficial use of the facilities. Workmanship shall be of good quality; i.e., mains shall be laid in a uniform alignment, fittings shall be properly restrained, trenches shall be properly excavated and backfilled, fire hydrants and valve boxes shall be adjusted to finished grade. All water mains shall be installed with tracer wire per CCUA standard location wire details.

02.1 Contractor LICENSE AND APPROVAL. Utility reserves the right to approve or deny approval of Contractor prior to construction of any on-site or off-site utility facilities. Contractor must hold a State Of Florida Underground Utility Contractors license, that named contracting company being the one doing the work on project, and demonstrate acceptable experience in the field of utility construction.

03. SURVEYS. The Utility Contractor shall provide all surveys necessary for the layout and construction of the work of his contract.

04. EARTHWORK. Earthwork shall include all excavation, fill and backfill (hand/machine), compaction and rough grading of materials encountered. No unsuitable materials clay, muck, or peat removed from pipe trenches are to be used for backfill. All fill or backfill shall be either sand or sandy clay, free of roots, trash or other debris. All backfill alongside of and to a height twenty-four inches above all pipe shall be free of clay or organic material, compacted by either hand or machine operation carefully to 98%. All other backfill shall be compacted by either hand or machine operation carefully to 95% (outside of paving), 98% (under paving) of its optimum moisture content as determined by ASTM D698, latest. Copies of compaction density test reports from a licensed testing agency shall be made available to CCUA if requested.

05. JOINT RESTRAINT. All fittings shall be properly and adequately restrained against lateral movement at all water main tees, crosses, valves, bends and fire hydrants. Restrainers shall be Uni-Flange Series 1300, 1350, 1390 or approved equal installed per Manufacturer's recommendations and Clay County Utility Authority Details and Specifications (SEE RESTRAINED JOINT SCHEDULE). See CCUA Approved Materials Manual for acceptable restraints.

06. DUCTILE IRON PIPE. Ductile iron pipe shall conform to ANSI Specification A21.50 (AWWA C150) latest, "Thickness Design of Ductile Iron Pipe", Table 50.5, laying condition Type 2, internal operating pressure of 250 p.s.i. for an 8-foot depth of cover, Class 51 minimum and shall be ANSI A21.51 (AWWA C151), latest centrifugally cast pipe. Laying lengths shall be 20 feet or less in length, and shall be clearly marked with pressure rating, thickness, class, height of pipe without lining, length, and Manufacturer. Ductile iron pipe for water service shall be furnished with cement lining per AWWA C110, C115 and C151. The pipe shall have design values of 60,000 p.s.i. minimum tensile strength, and 42,000 p.s.i. minimum yield strength. Ductile iron pipe for water or service lines shall be used in any easement, right-of-way, between lots, and any instance where a building foundation or other permanent appurtenance is within 10' of the water main or a service line larger than 3".

07. DUCTILE IRON FITTINGS shall be C153 cement lined and suitable for the type and class of pipe to which connected. Gaskets shall be suitable for potable, domestic water service. Minimum working pressure shall be 150 p.s.i.

08. POLYVINYL CHLORIDE PIPE. Polyvinyl chloride pipe for water mains 4 inch through 24 inches in diameter, shall be DR18 (C900) Pressure Class 235 psi PVC 1120; water distribution mains above 24 inches in diameter shall be DR25 (C900) PVC 1120, Pressure Class 165 psi, conforming to ASTM D-1784, D-2241, D-3139 and F-477, latest, or P.V.C. C900, Class 165, DR-25, conforming to ASTM D-1784, Cell Class 12454, ASTM F-477, ASTM D-3139, latest, and shall bear the seal of the National Sanitation Foundation. Pipe shall be color coded and marked "WATER" at every 12" along the barrel of the pipe, with lettering facing up. Couplings shall be rubber gasketed, push-on type conforming to ASTM D-2122. DR-18 shall be used for fire mains.

09. STEEL CASING PIPE. Steel casing pipe shall be of size indicated on the Drawings and shall conform to ASTM A139, with a minimum yield strength of 35,000 p.s.i.

10. POLYVINYL CHLORIDE (PVC 1120, SCHEDULE 80) PIPE shall conform to the requirements of ASTM D 1785. Fittings shall be suitable for type of installation required. All piping smaller than 4" shall be Schedule 80 PVC.

11. GATE VALVES AND BOXES. Gate valves shall be non-rising stem type and shall be suitable for a 200 p.s.i. non-shock working pressure. Gate valves shall be mechanical joint, flanged or screwed. Gate valves shall have a 2" operating nut and open left. Gate valves shall have joints suitable for the type of main on which installed. Valves 3" and larger shall be iron body, bronze fitted with resilient seat. Boxes shall be of cast iron construction, 7/32" minimum wall thickness and shall be nontacky tar enamel coated. The word "WATER" shall be cast in the cover. Other gate valves smaller than 3" shall be heavy-duty bronze ball valves. See CCUA Approved Materials Manual for acceptable valves.

12. WATER METER BOXES. Developer shall be responsible for installation of meter boxes on all water services as part of the water main installation. All curb stops shall be adjusted to the proper elevation and shall be accessible for the installation of the water meter. The Contractor shall be required to open all boxes for the Authority's inspector at the final inspection. A treated 6'-6" fence post marker shall be painted blue for identification. Meter boxes shall not be placed in any sidewalk or driveway without the approval of CCUA.

13. CURB STOPS. Curb stops shall be cast bronze, inverted key stop, roundway, with check, lock wing type, for locking in the closed position. See CCUA Approved Materials Manual for acceptable curb stops.

14. FIRE HYDRANTS. Fire hydrants shall be traffic type, 150 pound working pressure, AWWA Standard C502, latest revisions, with two 2 1/2" nozzles, one 4 1/2" nozzle and one 5 1/4" main valve. Fire hydrant shall be be compression type with breakable coupling and bolts. Pipe connection shall be mechanical joint. Fire hydrants shall be painted silver, BLP Mobile Paints, Liquid Aluminum, 1151 alkyd weight 56.6% x volume 41.2% VOC 3.76 lb. per gallon with 1 1/2" penta nuts, opening left. See CCUA Approved Materials Manual for acceptable fire hydrants.

15. INSTALLATION. The minimum cover over top of potable water main shall be 36". All water lines and appurtenances shall be thoroughly cleaned of all foreign matter before being lowered into the trench and shall be kept clean during laying operations by means of plugs or other approved methods. All pipe shall be checked for defects before being lowered into the trench. Defective pipe shall not be used. Pipe found to be defective after installation, shall be removed and replaced with sound pipe at no additional expense to the Owner. The full length of each section of pipe shall rest solidly upon the pipe bed, with recesses excavated to accommodate the bells and joints. All pipe that has the grade or joint disturbed after laying shall be taken up and reinstalled. The pipe shall not be laid in water or when trench or weather conditions are unsuitable for the work. All joints shall be cleaned of all foreign matter before making the joint. Fittings at bends in the pipe shall be properly restrained with joint restrainers adequately sized to prevent movement and dislocating or blowing off when the line is under pressure. Service laterals shall terminate at the point noted in the details.

16. TESTS. After the pipe is laid, the joints completed, and the trench backfilled, the newly laid pipe and appurtenances shall be subjected to a Hydrostatic and Leakage test of 150 pounds per square inch for a period of at least two hours. During this period, all joints shall be inspected to determine water tightness of the system. Any leaks detected shall be corrected. tests shall be in accordance with the CCUA's requirements and specifications. Water main lines shall be pressure tested and approved prior to paving, but not prior to subgrade mixing operation and limerock installation, finish graded and compacted. If CCUA inspector detects the water main has been damaged during priming or paving, he shall require the Contractor to repair the water main and retest the water main.

17. STERILIZATION. After completion of construction and testing, the water system shall be sterilized with chlorine in accordance with AWWA Standard C651 latest, and State of Florida Department of Environmental Protection requirements before acceptance for domestic operation. The amount of chlorine applied shall be sufficient to provide a dosage of 50 parts per million or more, for a period of at least 24 hours. A CCUA inspector must be present for the below referenced sterilization procedures. After completion of sterilization procedures, the system shall be flushed using chlorinated water from a domestic water source having a chlorine residual of at least 1 part per million. The Contractor shall obtain all bacteriological clearances as required by the Florida Department of Environmental Protection. After bacteriological clearances, the pressure in the main shall not drop below 20 p.s.i. Clearance report to be submitted to the Engineer. The Contractor should be aware that there is a timing maximum related to bacteriological clearance of the main, completion of as-built drawings and Engineer/CCUA completion of Certificate of Completion. In any project where the bacteriological clearances are greater than 30 days old at the time of submittal of Certificate of Completion to FDEP or CCUA, the Contractor may be required to pull more samples and obtain more bacteriological clearances. Prior to introducing the chlorine solution, the lines shall be thoroughly flushed with clean water utilizing full pipe diameter. In cases where the water supply is inadequate to flush the full pipe diameter, flushing shall occur to the extent of the water supply that is available. Dechlorination of flushing water may be required to be in compliance with the State of Florida Surface Water Quality Standards (F.A.C. 63-302.530). Dechlorination is necessary if the flushing of highly chlorinated water is to be discharged directly to a surface water or to a storm water system. If the water can be sheet flowed over a large area or discharged to a holding pond, dechlorination may be avoided. See note number 4 of Special Notes below.

18. BACTERIOLOGICAL SAMPLING. Contractor shall ensure the project construction is completely finished prior to any bacteriological sampling and testing.

19. FIRE LINES/MAINS. All fire lines or mains connecting to Clay County Utility Authority owned potable water main shall be installed by a State of Florida Licensed Fire Installation Contractor, and shall meet all requirements of the local Authority, State Fire Marshal, County Fire Marshal, and the National Fire Protection Association. Work performed must meet all requirements of NFPA 24, Standard for the Installation of Private Fire Service Mains and Their Appurtenances.

19.1 The Fire Marshal shall have the right to deny acceptance or use of any fire line, installed and connected to a Clay County Utility Authority owned and maintained water main until such time that the Contractor installing the fire line can produce proof to the Fire Marshal that all paperwork, fees due, or close out documents have been satisfactorily prepared and approved by Clay County Utility Authority.

20. POLYETHYLENE TUBING SERVICE LINES AND MAINS (2 INCH AND SMALLER): Tubing shall be manufactured of PE 4710, High Density Polyethylene (HDPE), in accordance with AWWA C901, ASTM D1248, ASTM D2239, ASTM D3737 and ASTM D3350. The tubing shall have a minimum working pressure of 250 psi. Polyethylene tubing shall be copper tube size SDR-9 and shall be colored blue. HDPE pipe shall have ultraviolet (UV) inhibitors for protection against direct sunlight for 1 year. Inserts for polyethylene tubing may be utilized, at Contractors options, and, if used, shall be 316 stainless steel. The use of no-lead brass couplings, tees and "Y" fittings are acceptable on poly service tubing, if not located under a roadway. Tubing shall be approved for use with potable water by the National Sanitation Foundation (NSF-14) and shall be continuously marked at intervals of not more than four feet with the following:
Nominal size
Pressure rating
NSF seal
Manufacturer's name or trademark
Standard dimension ratio
ASTM specification

GENERAL NOTES

1. AS-BUILT DRAWINGS AND ASSOCIATED COSTS. All cost records pertaining to the cost of water, reclaim and sewer facilities donated to the utility shall be provided to the Utility by applicant. Prior to acceptance of any extension to the Utility's system that is completed by a licensed underground utility Contractor, the Utility will require that the applicant's Contractor provide the Utility, to retain for its permanent records, all field as-built data which shall be provided in accordance with the Utility's `As-built Specifications Standards Manual`, which can obtained from the Utility's website (www.clayutility.org).

2. CONSTRUCTION WARRANTY AND WARRANTY SECURITY PERIOD. Developer's Contractor shall warranty Utility against defects in material and workmanship for the portion of the onsite system to be owned by the Utility for two (2) years. Developer shall secure from its Contractor a written and fully assignable warranty that the system installed will be and remain free from all defects, latent or otherwise, with respect to workmanship. materials, installation, and accuracy of his as-built drawings in accordance with the Utility approved plans and specifications for a period of two years from the date of the system acceptance by the Utility and immediately assign the same and the right to enforce the same to Utility on or before the date of the Utility's acceptance of the system for Ownership and maintenance.

3. CLEAN-UP. All surplus materials of construction shall be removed from the site and disposed of by the Contractor as part of his contract with the Owner.

4. RESTORATION. New Sanitary Sewer and Water Main Construction in earthen areas shall be seeded and mulched in accordance with Section 570 of Standard Specifications of the Florida Dept. of Transportation (latest edition). In locations where existing grassed (sodded) areas are disturbed, sod shall be replaced to preconstruction condition and to limits of construction or where directed by the engineer.

5. PERMITS. The Contractor shall be responsible for obtaining and providing records of all permits required for performing work under this contract, except that the FDEP permits, and wetland permits, if required, will be secured by the Owner or Developer.

6. PIPE BEDDING. In the event unsuitable or unstable bedding material is encountered at or below the limits of the excavation required for installation, such material shall be removed and replaced with suitable compacted backfill material specified by the Design Engineer and approved by the CCUA so as to provide a stable trench bedding surface suitable for proper pipe installation.

6.1. PIPE BEDDING (ROCK BEDDING MATERIAL) Rock material used for pipe bedding shall be #57 stone or crushed concrete (crush-crete) in a #57 size. Rock bedding material shall be completely wrapped in a heavy filter fabric material, overlapped a minimum of one foot. Rock bedding shall be installed to the correct grade and compacted to a density which will prevent any settlement, either by mechanical tamping equipment or by compressing the rock using the bottom of the backhoe bucket. The compaction shall be approved by CCUA inspector. The Contractor shall be required to have submittal approved by Design Engineer and CCUA prior to use of such rock bedding material.

7. DEWATERING. The Contractor shall at all times during construction provide ample means and equipment with which to promptly remove and dispose of all water entering the trench and structure excavations and shall keep said excavations acceptably dry until the piping and / or structures to be built therein are completed. All water pumped or drained from the work area shall be disposed of in a manner as to not damage sewer, water, electrical or any other piping, structures or property. No pipe shall be laid in water and no water shall be allowed to rise above the bottom of any pipe while it is being jointed, except as may be approved in writing by the CCUA

8. HYDROSTATIC TESTING. After all pressure pipes (water mains, services, and force mains) are laid, the joints completed, and the trench backfilled, the newly laid pipe and appurtenances shall be subjected to a hydrostatic test of 150 p.s.i. for a period of at least two hours. The engineer and the Clay County Utility Authority must be notified 48 hours before a test is to be performed. Test shall be as set forth in AWWA standard C600. Any leaks detected shall be corrected and the section of pipeline retested. The two hour test period shall begin when all joints have been determined to be water tight. Leakage shall be limited to that allowance set forth in Section 4 of AWWA Standard C600-87. Hydrostatic and leakage test and blow-down (zeroing of gage) must occur before sampling for bacteriological test. The maximum allowable pressure loss is 5 p.s.i. regardless of the length of pipe.

9. REPORTS. Reports of hydrostatic and leakage tests and sterilization of the newly completed systems shall be submitted to the Clay County Utility Authority prior to requesting acceptance of the system.

10. DENSITY TESTING. In-place density tests are required at intervals not to exceed 150' along pipelines for every other lift. A minimum of one test between manholes is required for every other lift regardless of the distance between sanitary sewer manholes.

11. CONCRETE. All Portland Cement concrete shall be of Type II Portland Cement, 2,500 p.s.i. minimum, ready mixed. All concrete shall be placed before the initial set has taken place. Stale or retempered concrete shall not be used.

12. GATE VALVES AND BOXES. Gate valves shall have a 2" operating nut and open left. Gate valves shall have joints suitable for the type main on which installed. Valves 2" and 3" shall be iron body, bronze fitted. Valves 4" and larger shall be iron body, bronze fitted with resilient seat. The word "WATER" on water boxes and "SEWER" on force main boxes shall be cast in the covers.

13. PIPE AND PIPE JOINTING FOR FUSED & HDPE PIPE:
a. Heat Fusion Jointing:
Joints between plain end pipes and pipe fittings shall be made by butt fusion when possible. Electro fusion welding may also be used to complete when the location is not accessible to butt fusion welding equipment. The on-site welder making the joints (butt fusion or electro fusion) shall have received specific training from the Manufacturer of the fittings and/or pipe being welded and shall have written proof of proper training/certification from the associated Manufacturers. Only certified welders who have written training certifications from the fitting and/or pipe Manufacturer will be allowed to perform this work. To weld a fitting or electro fusion coupling in place, the on-site welder (employee) must be trained and certified by the fitting Manufacturer. To butt weld pipe, the on-site welder (employee) must be trained and certified by the pipe Manufacturer. The fusion work shall be accomplished (welding and cool-down/closing times) in accordance with the fitting and pipe Manufacturers' recommendations, at a minimum. CCUA reserves the right to require the Contractor to remove from or not permit an employee to work on the welding or fusing portion of the work if in the opinion of CCUA that person is not properly trained or cannot perform the welding or fusion process in high quality and professional workmanship manner.

b. External and internal beads shall only be removed when required by CCUA. The internal bead shall be removed from all fused joints of a pipe that is to be used as a gravity sewer line, or as a sewer force main line or as a sleeve or host pipe which will have another pipe installed inside it. The external bead shall be removed from all fused joints of a pipe which will be installed inside of a sleeve or host pipe and the external bead shall be removed from all fused joints of a pipe to be pulled through a reamed Horizontal Directional Drill hole which may have a possible catch point such as extreme rocky ground conditions or other hazards. The Contractor shall be required to follow the requirements and recommendations of the pipe Manufacturer and Clay County Utility Authority.

SPECIAL NOTES

1. The installation of all pipe regardless of the type or size shall be installed in accordance with the Manufacturer's specifications or recommended criteria for the pipe being installed. No pipe shall be installed with the joints over-assembled or over-homed. The reference mark (home-line) shall not be installed into the bell beyond the Manufacturer's recommendation. The Contractor shall be responsible to mark any pipe cut to length with a reference mark (home-line) placed at the correct location on the pipe according to the type and size pipe being installed. CCUA will not permit any pipe joint to be left in place if the joint is over-homed. It shall be the Contractor's responsibility to obtain the information pertaining to installation of pipe to be installed from the Supplying Manufacturer and to install the pipe accordingly.

2. Deflection of all pipe regardless of the type or size shall be installed in accordance with the Manufacturer's specifications or recommended criteria for the pipe being installed. Any pipe which has been installed and does not meet the above listed criteria shall be removed and replaced with new pipe. All costs of removal and reinstallation of said pipe shall be at the Contractor's expense, with no cost to the Owner, and shall meet all CCUA requirements.

3. Any utility pipe regardless of the type or size which has been abandoned, or taken out of service or out of use for any reason, shall either be removed from the ground for its entire length and disposed of in a legal manner, or shall be grout filled in place for its entire length. A CCUA inspector shall be present and witness the grout filling of the pipe from start to finish of the process. If the abandoned pipe is being removed, a CCUA inspector shall be present or be able to view the open ditch where pipe was removed from prior to backfilling that ditch.

4. Disinfection Notes:
a. Only CCUA staff is authorized to change or adjust existing CCUA valves.
b. The General Superintendent of the Distribution and Collection System must be informed of any changes to existing CCUA valves.
c. The scheduling of the disinfection process for new developments installing water mains must be coordinated with CCUA at least seven (7) days in advance.
d. CCUA inspectors must be present to observe and monitor the disinfection process.

5. CLOSE OUT/COMPLETION. Minimum items required for Close Out / Completion for submittal to the Clay County Utility Authority will include:
a. Construction Warranty from Developer in the form of a Bond, Letter of Credit or Cashier's Check for a two-year period.
b. Warranty Certificate for a two-year warranty from the Contractor to the Developer and assignment of same to the Clay County Utility Authority (CCUA).
c. Developer's Affidavit certifying there is no outstanding debt against utility assets to be deeded to CCUA
d. Value of Acceptance Report showing value of assets to be deeded to the CCUA
e. Bill of Sale to CCUA
f. Bacteriological Test(s)
g. Pressure Test(s)
h. Television Reports and Recorded DVDs
i. Density Reports
j. Locate Wire test
k. Final As-Built Drawings and disks

FINAL INSPECTION PROCEDURES

PRIOR TO FINAL INSPECTION, THE CONTRACTOR SHALL PROVIDE THE FOLLOWING:

1. The sewer line T.V. report, and recorded DVD.
2. All manhole rings and covers have to be adjusted to finish grade.
3. The pressure test and bacteriological clearance analysis report.
4. Water services must be lowered and meter boxes installed, valve boxes must be set on all gate valves.
5. Locate Wire test.
6. Not less than 10 business days Prior to Final Inspection, Contractor shall submit as-built drawings showing at least the following:
a. Location of valves, mains, services, manholes and locate wire boxes.
b. Elevation of sewer lines in the manhole, and stub-outs.
7. As-built drawings shall have been updated to accommodate the Clay County Utility Authority's comments and the final elevation of the manhole tops must be included (shall comply to the guidance set forth in Utility's As-built Specifications Standards Manual, which can be obtained from the Utility's website www.clayutility.org).
8. The Engineer of Record certification to FDEP. This can be done with completed as-builts.
9. As-builts, must be accepted and approved by the Clay County Utility Authority.
10. All valves, locate wire boxes, sewer, water and reclaimed services shall be scribed in curb and painted the correct color.
11. All services and valves to be plainly marked with a treated fence post, and electronic locate marker on all sewer lateral and sewer stubs.
12. Pump station start-up report with draw down data for each pump and with both pumps in operation. All electrical components to be completely installed and in proper working condition.

PRIOR TO FINAL ACCEPTANCE FOR OWNERSHIP, THE FOLLOWING MUST BE COMPLETED:

1. A preliminary inspection must be coordinated by the underground utility Contractor and held a minimum of fifteen (15) working days prior to the final inspection/start-up. The preliminary inspection will compare the approved design drawings to the actual site installation, noting any deficiencies.

2. The following must be represented at the preliminary and final inspection:
a. The Clay County Utility Authority's inspection and distribution and collection departments
b. The project's Developer and/or general Contractor
c. The Underground Utility Contractor
d. All subcontractors associated with the lift station (electrical, pump Manufacturer, control panel Manufacturer, etc.)

3. All manhole rings and covers have to be adjusted to finish grade.
4. Water services must be lowered and meter boxes installed, valve boxes must be set on all gate valves.
5. As-built drawings shall have been updated to accommodate the Clay County Utility Authority's comments and the final elevation of the manhole tops must be included (shall comply to the guidance set forth in utility's `as-built specifications standards manual`, which can be obtained from the utility's web site (www.clayutility.org).
6. All valves, locate wire boxes, sewer, water and reclaimed services shall be scribed in curb and painted the correct color
7. As-builts must be accepted by the Clay County Utility Authority.

STANDARD WATER AND SEWER SYSTEM OUTLINE
TECHNICAL SPECIFICATIONS FOR DEVELOPER
INITIATED PROJECTS
(FOR DEVELOPER INITIATED PROJECTS ONLY)

CLAY COUNTY
UTILITY AUTHORITY
3176 OLD JENNINGS ROAD
MIDDLEBURG, FLORIDA 32068-3907
TELEPHONE: (904) 272-5999

ACAD FILE NAME
SPECIF_D.DWG
SHEET NO.
C-402

NO	DATE	BY	REVISION DESCRIPTION
24	JUN 17	RHD	UPDATED VARIOUS NOTES
23	JAN 17	RHD	UPDATED WATER OUTLINE NOTE 2.0
22	SEP 15	RHD	UPDATED
21	JUNE 15	RHD	UPDATED
20	APR. 15	RHD	UPDATED
19	FEB. 15	RHD	REVISED 06. SERVICE SERVICE LATERAL NOTES
18	DEC. 14	RHD	REVISED 24. JACK AND BORE REQUIREMENTS

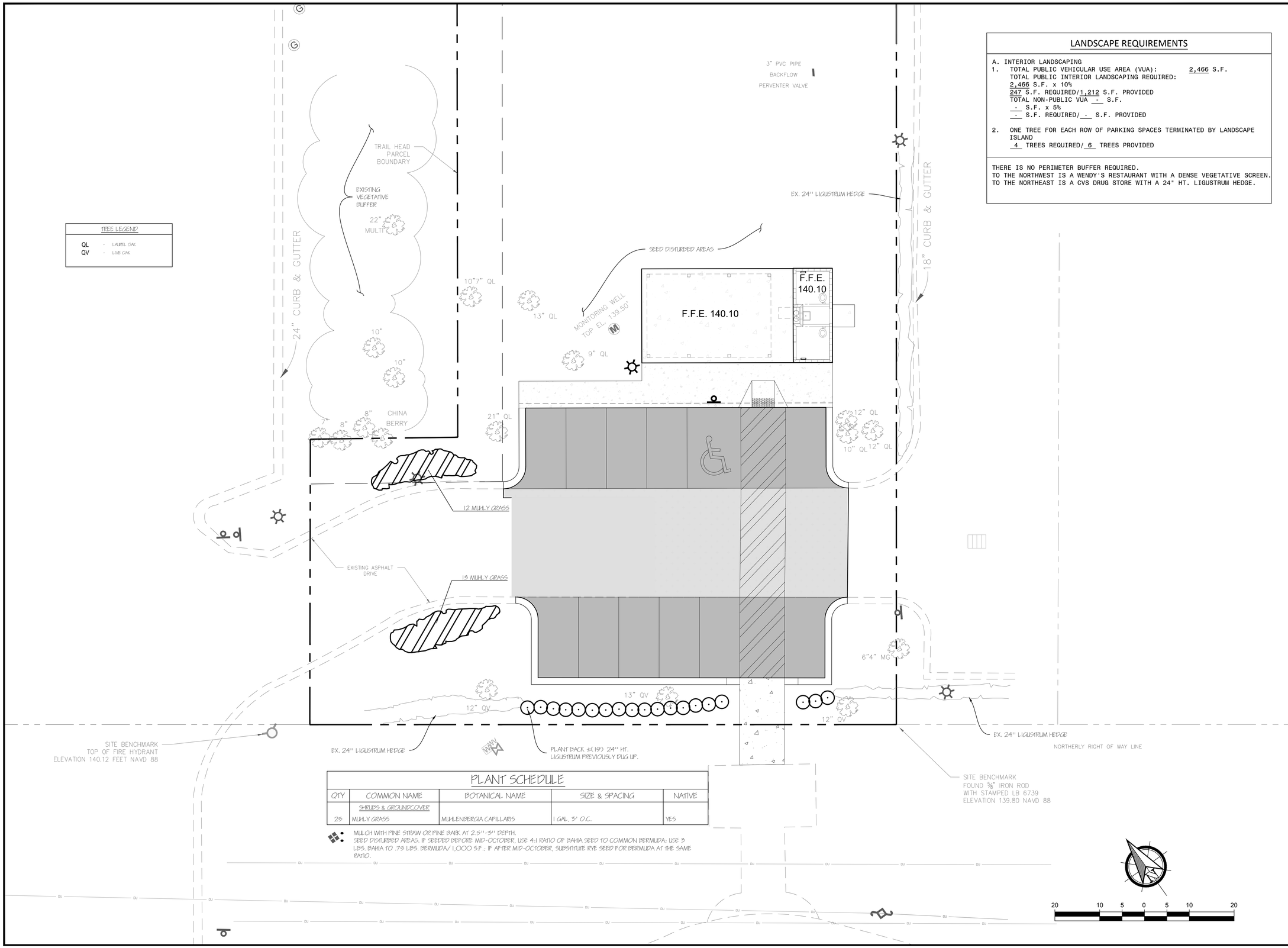

TREE LEGEND

QL	-	LAUREL OAK
QV	-	LIVE OAK

LANDSCAPE REQUIREMENTS

A. INTERIOR LANDSCAPING
1. TOTAL PUBLIC VEHICULAR USE AREA (VUA): 2,466 S.F.
   TOTAL PUBLIC INTERIOR LANDSCAPING REQUIRED:
   2,466 S.F. x 10%
   247 S.F. REQUIRED/1,212 S.F. PROVIDED
   TOTAL NON-PUBLIC VUA - S.F.
   - S.F. x 5%
   - S.F. REQUIRED/ - S.F. PROVIDED

2. ONE TREE FOR EACH ROW OF PARKING SPACES TERMINATED BY LANDSCAPE ISLAND
   4 TREES REQUIRED/ 6 TREES PROVIDED

THERE IS NO PERIMETER BUFFER REQUIRED.
TO THE NORTHWEST IS A WENDY'S RESTAURANT WITH A DENSE VEGETATIVE SCREEN.
TO THE NORTHEAST IS A CVS DRUG STORE WITH A 24" HT. LIGUSTRUM HEDGE.

PLANT SCHEDULE

QTY	COMMON NAME	BOTANICAL NAME	SIZE & SPACING	NATIVE
	SHRUBS & GROUNDCOVER			
25	MUHLY GRASS	MUHLENBERGIA CAPILLARIS	1 GAL., 3' O.C.	YES

MULCH WITH PINE STRAW OR PINE BARK AT 2.5"-3" DEPTH.
SEED DISTURBED AREAS. IF SEEDED BEFORE MID-OCTOBER, USE 4:1 RATIO OF BAHIA SEED TO COMMON BERMUDA; USE 3 LBS. BAHIA TO .75 LBS. BERMUDA/ 1,000 S.F.; IF AFTER MID-OCTOBER, SUBSTITUTE RYE SEED FOR BERMUDA AT THE SAME RATIO.

CITY OF KEYSTONE HEIGHTS
"IN GOD WE TRUST"
SINCE 1925

Michael Baker INTERNATIONAL
12740 GRAN BAY PARKWAY WEST
SUITE 2110, JACKSONVILLE, FLORIDA 32258
(904) 380-2500
CORPORATE LICENSE NUMBER 00004307

Designer: DB	Checked by: DB
Technician: DL	Baker Project No: 175439

Seal:

J. MIKE DONNELL, RLA
FLA. REG. NO. 1363

Keymap/Notes:

REVISIONS

No.	Description	Date	By

Project Name:

CITY OF KEYSTONE HEIGHTS TRAIL HEAD

Drawing Name:

LANDSCAPE PLAN

Donnell Landscape Design, Inc.
5617 Salerno Road, Jacksonville, FL 32244
Cell: 904·333·2342

ENGINEER OF RECORD

Date: MARCH 2020	Drawing Number: L-01
Scale: AS SHOWN	

Plotted on: 1/14/2020 10:12 PM By:Darcy Ferris
Located: D:\Business\Mike Donnell\2020 Projects\Keystone Trail Head\Original CAD Files\2020-01-07\(05) - 175439 - L-01 - Landscape Plan.dwg

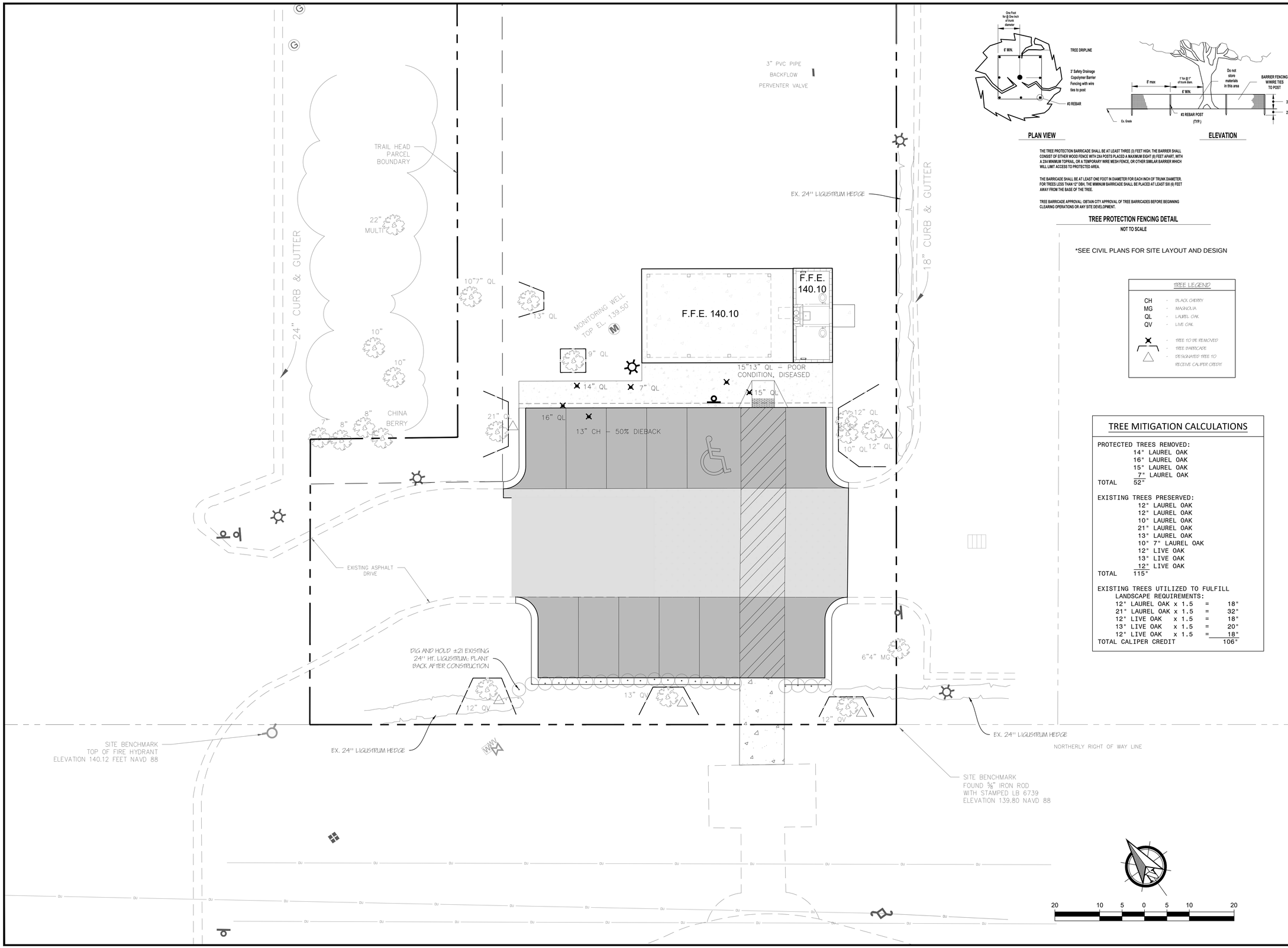

PLAN VIEW **ELEVATION**

THE TREE PROTECTION BARRICADE SHALL BE AT LEAST THREE (3) FEET HIGH. THE BARRIER SHALL CONSIST OF EITHER WOOD FENCE WITH 2X4 POSTS PLACED A MAXIMUM EIGHT (8) FEET APART, WITH A 2X4 MINIMUM TOPRAIL, OR A TEMPORARY WIRE MESH FENCE, OR OTHER SIMILAR BARRIER WHICH WILL LIMIT ACCESS TO PROTECTED AREA.

THE BARRICADE SHALL BE AT LEAST ONE FOOT IN DIAMETER FOR EACH INCH OF TRUNK DIAMETER. FOR TREES LESS THAN 12" DBH, THE MINIMUM BARRICADE SHALL BE PLACED AT LEAST SIX (6) FEET AWAY FROM THE BASE OF THE TREE.

TREE BARRICADE APPROVAL: OBTAIN CITY APPROVAL OF TREE BARRICADES BEFORE BEGINNING CLEARING OPERATIONS OR ANY SITE DEVELOPMENT.

TREE PROTECTION FENCING DETAIL

NOT TO SCALE

*SEE CIVIL PLANS FOR SITE LAYOUT AND DESIGN

TREE LEGEND

CH	-	BLACK CHERRY
MG	-	MAGNOLIA
QL	-	LAUREL OAK
QV	-	LIVE OAK
X	-	TREE TO BE REMOVED
	-	TREE BARRICADE
△	-	DESIGNATED TREE TO RECEIVE CALIPER CREDIT

TREE MITIGATION CALCULATIONS

PROTECTED TREES REMOVED:
14" LAUREL OAK
16" LAUREL OAK
15" LAUREL OAK
7" LAUREL OAK
TOTAL 52"

EXISTING TREES PRESERVED:
12" LAUREL OAK
12" LAUREL OAK
10" LAUREL OAK
21" LAUREL OAK
13" LAUREL OAK
10" 7" LAUREL OAK
12" LIVE OAK
13" LIVE OAK
12" LIVE OAK
TOTAL 115"

EXISTING TREES UTILIZED TO FULFILL LANDSCAPE REQUIREMENTS:

12" LAUREL OAK	x 1.5	=	18"
21" LAUREL OAK	x 1.5	=	32"
12" LIVE OAK	x 1.5	=	18"
13" LIVE OAK	x 1.5	=	20"
12" LIVE OAK	x 1.5	=	18"
TOTAL CALIPER CREDIT			106"

CITY OF KEYSTONE HEIGHTS
"IN GOD WE TRUST"
SINCE 1925

Michael Baker
INTERNATIONAL
12740 GRAN BAY PARKWAY WEST
SUITE 2110, JACKSONVILLE, FLORIDA 32258
(904) 380-2500
CORPORATE LICENSE NUMBER 00004307

Designer: DB	Checked by: DB
Technician: DL	Baker Project No: 175439

Seal:

J. MIKE DONNELL, RLA
FLA. REG. NO. 1363

Keymap/Notes:

REVISIONS

No.	Description	Date	By

Project Name:

CITY OF KEYSTONE HEIGHTS TRAIL HEAD

Drawing Name:

TREE MITIGATION PLAN

Donnell Landscape Design, Inc.
5617 Salerno Road, Jacksonville, FL 32244
Cell: 904-333-2342

ENGINEER OF RECORD

Date: MARCH 2020	Drawing Number: L-02
Scale: AS SHOWN	

Plotted on: 1/14/2020 10:12 PM By:Darcy Farris
Located: D:\Business\Mike Donnell\2020 Projects\Keystone Trail Head\Original CAD Files\2020-01-07\(05) - 175439 - L-01 - Landscape Plan.dwg

ABB	DESCRIPTION
A	
&	AND
<	ANGLE
@	AT
ACP	ACOUSTIC CEILING PANEL
ADJ	ADJACENT, ADJUSTABLE
AED	AUTOMATED EXTERNAL DEFIBRILLATOR
AFF	ABOVE FINISHED FLOOR
AP	ACCESS PANEL
APPROX	APPROXIMATE(LY)
ARCH	ARCHITECT OR ARCHITECTURAL
ASTM	AMERICAN SOCIETY FOR TESTING MATERIAL
ATTEN	ATTENUATE, ATTENUATION
AVG	AVERAGE
B	
B/	BOTTOM OF
B/C	BOTTOM OF CURB
BC	BASE CABINET
BD	BOARD
BIT	BITUMINOUS
BLDG	BUILDING
BSMT	BASEMENT
C	
[	CHANNEL
CAB	CABINET
CC	CENTER TO CENTER
CG	CORNER GUARD
CJ	CORNER JOINT
CL	CENTER LINE
CLG	CEILING
CLG HT	CEILING HEIGHT
CLO	CLOSET
CLR	CLEAR
CMU	CONCRETE MASONRY UNIT
CO	CLEAN OUT
COL	COLUMN
CONC	CONCRETE
CONT	CONTINUOUS
CORR	CORRIDOR
CP	COPIER
CT	CERAMIC TILE
CY	CUBIC YARD
D	
DF	DRINKING FOUNTAIN
DIA	DIAMETER
DIM	DIMENSION
DN	DOWN
DW	DISHWASHER
DWG	DRAWING
E	
E	EAST
EA	EACH
EB	EDGE BANDING
EIFS	EXTERIOR INSULATION FINISH SYSTEM
EJ	EXPANSION JOINT
ELEC	ELECTRICAL
ELEV	ELEVATOR
EMER	EMERGENCY
ENCL	ENCLOSE(URE)
EP	ELECTRICAL PANEL
EQ	EQUAL
EQUIP	EQUIPMENT
EWC	ELECTRIC WATER COOLER
EXIST	EXISTING
EXP BLT	EXPANSION BOLT
EXT	EXTERIOR
F	
<	FABRIC
F/F	FACE TO FACE
FAX	FACSIMILE
FE	FIRE EXTINGUISHER
FEC	FIRE EXTINGUISHER CABINET
FHC	FIRE HOSE CABINET
FL	FLOOR
FL CO	FLOOR CLEANOUT
FP	FIRE PROTECTION
FPRF	FIREPROOF(ING)
FR	FIRE RATED OR FRAME
FT	FOOT/FEET
G	
GA	GAUGE
GL	GLASS OR GLAZING

ABB	DESCRIPTION
GRD	GROUND
GWB	GYPSUM WALL BOARD
H	
HB	HOSE BIBB
HC	HANDICAP(PED)
HDW	HARDWARE
HM	HOLLOW METAL
HOR	HORIZONTAL
HP	HIGH POINT
HTR	HEATER
I	
ID	INSIDE DIAMETER
IN	INCH(ES)
INT	INTERIOR
J	
JB	JAMB
JST	JOIST
JT	JOINT
L	
LAM	LAMINATE
LAN	LOCAL AREA NETWORK CONNECTION
LAV	LAVATORY
LB	POUND
LF	LINEAL FOOT
LP	LOW POINT
LTL	LINTEL
M	
m	METERS
MAS	MASONRY
MAX	MAXIMUM
MDF	MEDIUM DENSITY FIBERBOARD
MECH	MECHANICAL
MEZZ	MEZZANINE
MFR	MANUFACTURE
MH	MANHOLE
MICRO	MICROWAVE
MIN	MINIMUM
MISC	MISCELLANEOUS
mm	MILLIMETERS
MO	MASONRY OPENING
MTD	MOUNTED EL
MTL	METAL
N	
N	NORTH
NFPA	NATIONAL FIRE PROTECTION ASSOCIATION
NIC	NOT IN CONTRACT
NOM	NOMINAL
NTS	NOT TO SCALE
O	
OC	ON CENTER
OD	OUTSIDE DIAMETER
OFF	OFFICE
OPNG	OPENING
OPP	OPPOSITE
P	
PART	PARTITION
PL	PLATE
PLAM	PLASTIC LAMINATE
PLAS	PLASTER
PLYWD	PLYWOOD
PNL	PANEL
POS	POINT OF SALE
PR	PAIR
PRCST	PRECAST
PREFAB	PREFABRICATED
PROP	PROPERTY
PSI	POUNDS PER SQUARE INCH
PSIG	POUNDS PER SQUARE INCH GAUGE
PT	POINT
PTD	PAINTED
Q	
QTY	QUANTITY
R	
R	RISER OR RADIUS
RCP	REFLECTED CEILING PLAN
RD	ROOF DRAIN
REF	REFER / REFERENCE
REG	REGISTER
REINF	REINFORCING
REQ'D	REQUIRED
RFG	REFRIGERATOR
RG	RANGE

ABB	DESCRIPTION
RM	ROOM
RO	ROUGH OPENING
RTS	RUBBER TRANSITION STRIP
RWC	RAIN WATER CONDUCTOR
S	
S	SOUTH
SAN	SANITARY
SCHD	SCHEDULE
SEC	SECTION
SF	SQUARE FOOT
SIM	SIMILAR
SPKLR	SPRINKLER
SQ	SQUARE
SQ FT	SQUARE FOOT
SS	STAINLESS STEEL
STD	STANDARD
STL	STEEL
STOR	STORAGE
SUSP	SUSPEND, SUSPENDED, OR SUSPENSION
SYS	SYSTEM
T	
"T"	TEE (BAR OR W)
T	TREAD
T/	TOP OF
T/C	TOP OF CURB
TB	TACKBOARD
TC	TERRA COTTA
TEL	TELEPHONE
TEMP	TEMPERED OR TEMPERATURE
TERM	TERMINATE / TERMINAL
THRESH	THRESHOLD
TLT	TOILET
TV	TELEVISION
TYP	TYPICAL
U	
UH	UNIT HEATER
UL	UNDERWRITER'S LABORATORY
UMCT	UNGLAZED MOSAIC CERAMIC TILE
UNO	UNLESS NOTED OTHERWISE
V	
VEST	VESTIBULE
VIF	VERIFY IN FIELD
W	
W	WEST
W/	WITH
W/O	WITHOUT
WC	WATER CLOSET
WIN	WINDOW
WP	WATERPROOF(ING)
WSCT	WAINSCOT
WT	WEIGHT
WWF	WELDED WIRE REINFORCEMENT

SYMBOLS

VIEW TITLE
SCALE:
VIEW CALLOUT

INTERIOR EXTERIOR
ELEVATIONS

BUILDING SECTION

WALL SECTION

INTERIOR SECTION

DETAIL SECTION

CALLOUT PLAN, SECTION OR DETAIL

COLUMN GRID LABEL - NEW

COLUMN GRID LABEL - EXISTING

REVISION

ROOM NAME
###
ROOM TAG

#X#.#
PARTITION TYPE

DOOR TAG - SEE SCHEDULE

##.##
KEYNOTE

WINDOW TYPE

TOILET ROOM ACCESSORIES

ELEVATION MARK

DENOTES ABOVE, BELOW, OR BEHIND

ACCESSIBLE TOILET STALL

RECYCLING COLLECTION AREA

PLAN NORTH
NORTH ARROW

CENTER LINE

FLOOR TRANSITION

SLOPE
ROOF SLOPE ARROW

LEVEL LINE

SPOT ELEVATION

SECTIONS/ SECTIONAL DETAILS

CONCRETE BLOCK
CAST-IN-PLACE-CONCRETE
STRUCTURAL/MISCELLANEOUS STEEL
EARTH
GRAVEL/ENGINEERED FILL
STONE, OR NATURAL BUILDING STONE
PLASTER OR GYPSUM BOARD, OR EXTERIOR SHEATHING
BATT INSULATION
ROOF, TAPERED, CAVITY OR RIGID INSULATION
FINISHED WOOD TRIM
PLYWOOD
CAVITY DRAINAGE MATERIAL

PLANS/ PLAN FIRE RATED GRAPHICS

SMOKE
1/2 HOUR
1 HOUR
2 HOUR
3 HOUR
4 HOUR

PLANS / PLAN DETAIL GRAPHICS

BRICK WALLS
CONCRETE BLOCK WALLS
CAST-IN-PLACE-CONCRETE WALLS
STUD WALLS
CONCRETE SLABS AND/OR CONCRETE SIDEWALKS
EXITSTING WALLS

DOOR DESIGNATIONS

EXISTING DOOR AND/OR FRAME TO REMAIN - SEE DOOR SCHEDULE FOR ANY ADDITIONAL WORK

NEW DOOR AND/OR FRAME TO BE PROVIDED - SEE DOOR SCHEDULE

EXISTING DOOR AND/OR FRAME TO BE REMOVED - SEE DEMO PLAN/NOTES

NOTES - GENERAL

1 ALL DIMENSIONS ARE IN FEET / INCHES UNLESS NOTED OTHERWISE
2 THESE GENERAL NOTES ARE NOT INTENDED TO REPLACE SPECIFICATIONS - REFER TO SPECIFICATIONS FOR REQUIREMENTS IN ADDITION TO GENERAL NOTES
3 THE TERMS RENOVATE AND REHABILITATE ARE USED INTERCHANGEABLY IN THESE DOCUMENTS.
4 ROOM AREAS AND PERIMETERS ARE APPROXIMATE AND FOR REFERENCE ONLY. VERIFY QUANTITIES AND DIMENSIONS IN FIELD.
5 NO DEVIATIONS FROM THESE CONTRACT DOCUMENTS SHALL BE MADE WITHOUT THE PRIOR WRITTEN APPROVAL OF THE ARCHITECT
6 DO NOT SCALE DIMENSIONS FROM DRAWINGS - THE CONTRACTOR SHALL REQUEST NECESSARY DIMENSIONS NOT SHOWN ON THE DRAWINGS FROM THE ARCHITECT
7 ALL DIMENSIONS ARE TO FACE OF PARTITION OR CENTER OF DOORS, WINDOWS AND OPENINGS UNLESS NOTED OTHERWISE - ALL NON-DIMENSIONED DOOR LOCATIONS SHALL BE OFFSET 4" FROM THE ADJACENT WALL TO THE HINGE SIDE OF THE DOOR OPENING.
8 DETAILS SHOWN ON DRAWINGS ARE TYPICAL FOR ALL SIMILAR CONDITIONS.
9 DRAWING NOTES AND SPECIFICATIONS ARE INSTRUCTIONS TO THE CONTRACTOR AND APPLY TO ALL THE WORK UNLESS MORE SPECIFIC INFORMATION IS SHOWN ELSEWHERE ON THE DRAWINGS OR WRITTEN IN THE SPECIFICATIONS - IN THE EVENT OF CONFLICTING INSTRUCTIONS, THE ARCHITECT SHALL DETERMINE WHAT CONTROLS
10 VERIFY ALL DIMENSIONS IN THE FIELD AND COORDINATE DIMENSIONS SHOWN ON THE CONTRACT DRAWINGS WITH FABRICATION AND FIELD CONDITIONS AND REPORT ANY INCONSISTENCIES TO THE ARCHITECT BEFORE PROCEEDING WITH WORK
11 PRINCIPAL OPENINGS IN THE STRUCTURE ARE SHOWN ON THESE DRAWINGS - THE GENERAL CONTRACTOR SHALL EXAMINE THE ARCHITECTURAL, MECHANICAL, ELECTRICAL, AND PLUMBING DRAWINGS FOR REQUIRED OPENINGS GENERAL CONTRACTOR SHALL VERIFY SIZE AND LOCATION OF ALL OPENINGS WITH ALL SUB-CONTRACTORS PRIOR TO CONSTRUCTION
12 STRUCTURAL DRAWINGS AND SPECIFICATIONS REPRESENT THE FINISHED STRUCTURE, AND, EXCEPT WHERE SPECIFICALLY SHOWN, DO NOT INDICATE THE METHOD OR MEANS OF CONSTRUCTION - THE CONTRACTOR SHALL SUPERVISE CONSTRUCTION MEANS, METHODS, PROCEDURES, TECHNIQUES, SEQUENCE, AND APPLICABLE SAFETY REGULATIONS TO BE FOLLOWED
13 CONTRACTOR SHALL BE RESPONSIBLE FOR SCHEDULING AND COORDINATING THE WORK OF THE SUB-CONTRACTORS - THE CONTRACTOR SHALL BE RESPONSIBLE TO COORDINATE WITH THE BUILDING OWNER, TENANT OR HIS REPRESENTATIVES THE DELIVERY AND INSTALLATION OF ITEMS BEING PROVIDED AND INSTALLED BY OTHERS
14 MECHANICAL, PLUMBING AND ELECTRICAL WORK RELATED TO DEMOLITION AND NEW INSTALLATION OF COMPONENTS SHALL COMPLY WITH ALL APPLICABLE CODES
15 ALL MATERIALS, FABRICATION AND INSTALLATION SHALL COMPLY WITH THE APPLICABLE REQUIREMENTS AND SPECIFICATIONS FOR EACH DIVISION OF WORK
16 CONSTRUCTION MUST COMPLY WITH APPLICABLE CODES AND ORDINANCES, LAWS AND SAFETY ORDERS AS DIRECTED BY LOCAL JURISDICTION
17 CONTRACTOR SHALL BE RESPONSIBLE FOR THE TIMELY ORDERING OF MATERIALS INCLUDED IN THESE CONTRACT DOCUMENTS - SOME ITEMS IN THESE DOCUMENTS MAY REQUIRE LONG LEAD TIMES OR SPECIAL COORDINATION SUBSTITUTIONS WILL NOT BE ALLOWED FOR MATERIAL NOT ORDERED IN A TIMELY FASHION
18 CONTRACTOR SHALL CHECK AND VERIFY ALL DIMENSIONS AND GRADE CONDITIONS, (BOTH NEW AND EXISTING) REPORTING ANY DISCREPANCIES TO THE ARCHITECT PRIOR TO ORDERING MATERIALS OR PROCEEDING WITH ANY PHASE OF THE WORK
19 CONTRACTOR SHALL CHECK AND VERIFY ALL DIMENSIONS PRIOR TO COMMENCING CONSTRUCTION - ALL DISCREPANCIES SHALL BE NOTED AND SENT TO THE ARCHITECT WITH ADEQUATE TIME TO REVIEW PRIOR TO STARTING THAT PORTION OF THE WORK IN ORDER TO AVOID PROJECT DELAYS
20 CONTRACTOR SHALL CLEAN, PATCH AND REPAIR ALL SURFACES DAMAGED BY DEMOLITION, ALTERATION OR INSTALLATION OF THE WORK
21 CONTRACTOR SHALL PREPARE ALL WALLS AND PARTITIONS AS REQUIRED BY THE FINISH MANUFACTURER TO RECEIVE THE FINISHES SPECIFIED
22 CONTRACTOR SHALL PROTECT ALL MONUMENTS, IRON PINS, AND PROPERTY CORNERS DURING CONSTRUCTION
23 CONTRACTOR SHALL PROVIDE ADDITIONAL FURRING (THE ENTIRE LENGTH OF THE WALL) TO FULLY CONCEAL ALL MECHANICAL, ELECTRICAL, PLUMBING AND STRUCTURAL ITEMS THAT PROJECT FROM THE FACE OF THE WALL OR PARTITION AND ARE NOT SPECIFICALLY NOTED TO BE SURFACE MOUNTED
24 CONTRACTOR SHALL REFER TO ARCHITECTURAL PLANS FOR BUILDING DIMENSIONS, BUILDING UTILITY ENTRANCE LOCATIONS AND EXACT LOCATIONS AND DIMENSIONS OF EXITS, CANOPIES, RAMPS, DOWNSPOUTS, GRAVEL AREAS ADJACENT TO BUILDING WALLS, UTILITY ENTRANCE LOCATIONS AND BOLLARDS IN BUILDING WALKWAYS
25 CONTRACTOR SHALL VISIT THE SITE AND VERIFY ALL EXISTING CONDITIONS PRIOR TO COMMENCING CONSTRUCTION - ALL DISCREPANCIES SHALL BE NOTED AND SENT TO THE ARCHITECT WITH ADEQUATE TIME TO REVIEW PRIOR TO STARTING THAT PORTION OF THE WORK IN ORDER TO AVOID PROJECT DELAYS
26 CONTRACTOR TO PROVIDE PORTABLE FIRE EXTINGUISHERS IN ACCORDANCE WITH LOCAL JURISDICTION AND NFPA 10. MAXIMUM TRAVEL DISTANCE TO NEAREST FIRE EXTINGUISHER FROM ANY POINT IN THE BUILDING SHALL NOT EXCEED 50 FEET. EXISTING FIRE EXTINGUISHERS SHALL BE TESTED AND RE-USED IF FULLY OPERATIONAL. FIRE EXTINGUISHERS SHALL BE SIZED FOR NO LESS THAN ORDINARY HAZARD.
27 REMOVE AND REINSTALL PICTURES, TV'S, BULLETIN BOARDS ETC, PRIOR TO AND AFTER PAINTING
28 ALL REQUESTS FROM INFORMATION PROMPTED BY THE BUILDING OFFICIALS SHALL INCLUDE A COPY OF THE BUILDING OFFICIALS COMMENTS AND THE BUILDING INSPECTORS FIELD REPORT TO ENSURE AN ACCURATE AND TIMELY RESPONSE
29 CONTRACTOR AND SUBCONTRACTOR SHALL ALL BE LICENSED TO PERFORM THEIR REQUESTED DUTIES AS REQUIRED IN ACCORDANCE WITH LOCAL STANDARDS
30 CONTRACTOR SHALL COMPARE STRUCTURAL SECTIONS WITH ARCHITECTURAL SECTIONS AND REPORT ANY DISCREPANCY TO THE ARCHITECT PRIOR TO FABRICATION OR INSTALLATION OF STRUCTURAL MEMBERS

Michael Baker
INTERNATIONAL
12740 GRAN BAY PARKWAY W
SUITE 2110
JACKSONVILLE, FL 32258
(904) 380-2500

Consultant

SEAL

NO.	DATE	DESCRIPTION

REVISIONS

CITY OF KEYSTONE HEIGHTS TRAIL HEAD
STREET ADDRESS
CITY, STATE ZIP CODE

ARCHITECTURAL GENERAL NOTES, MATERIAL & ANNOTATION LEGEND

Project Number: 175439
Date: MARCH 2020
Scale: AS NOTED
Sheet # A-001

PROGRESS PRINT

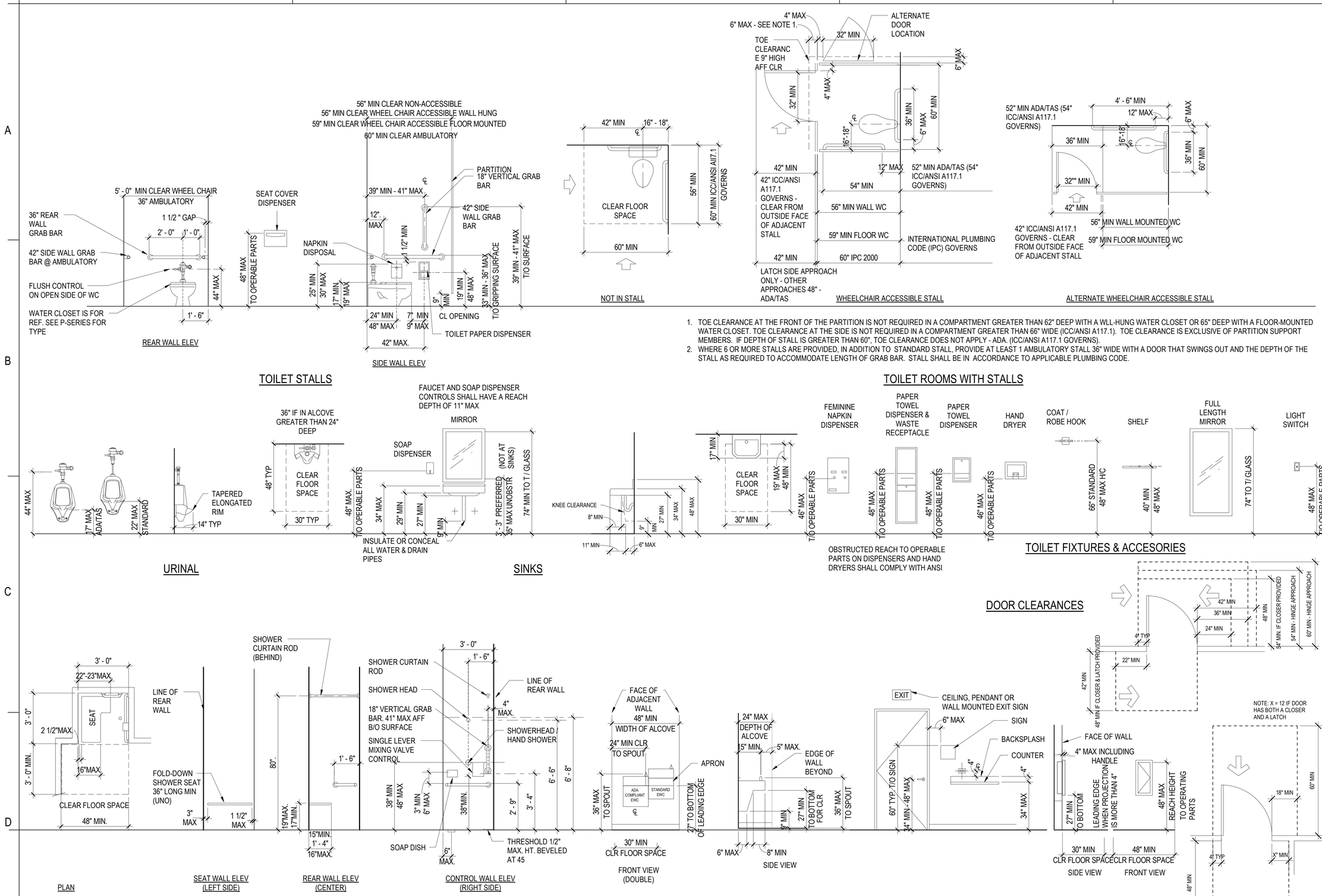

1. TOE CLEARANCE AT THE FRONT OF THE PARTITION IS NOT REQUIRED IN A COMPARTMENT GREATER THAN 62" DEEP WITH A WLL-HUNG WATER CLOSET OR 65" DEEP WITH A FLOOR-MOUNTED WATER CLOSET. TOE CLEARANCE AT THE SIDE IS NOT REQUIRED IN A COMPARTMENT GREATER THAN 66" WIDE (ICC/ANSI A117.1). TOE CLEARANCE IS EXCLUSIVE OF PARTITION SUPPORT MEMBERS. IF DEPTH OF STALL IS GREATER THAN 60", TOE CLEARANCE DOES NOT APPLY - ADA. (ICC/ANSI A117.1 GOVERNS).
2. WHERE 6 OR MORE STALLS ARE PROVIDED, IN ADDITION TO STANDARD STALL, PROVIDE AT LEAST 1 AMBULATORY STALL 36" WIDE WITH A DOOR THAT SWINGS OUT AND THE DEPTH OF THE STALL AS REQUIRED TO ACCOMMODATE LENGTH OF GRAB BAR. STALL SHALL BE IN ACCORDANCE TO APPLICABLE PLUMBING CODE.

TOILET ROOMS WITH STALLS

1 Arch - Handicapped Accessible Mounting Heights
SCALE: 3/8" = 1'-0"

CITY OF KEYSTONE HEIGHTS "IN GOD WE TRUST" SINCE 1925

Michael Baker INTERNATIONAL
12740 GRAN BAY PARKWAY WEST
SUITE 2110, JACKSONVILLE, FL 32258
(904) 380-2500

Designer: XXX	Checked by: XXX
Technician:	Baker Project No: 175439

Keynote/Notes:

NO.	DATE	DESCRIPTION

REVISIONS

Project Name: CITY OF KEYSTONE HEIGHTS TRAIL HEAD

Drawing Name: **TYPICAL ADA DETAILS**

ARCHITECT OF RECORD

Date: MARCH 2020
Scale: AS NOTED
Sheet #: A-002

NOTES - COMP FLOOR PLANS

1 REFER TO SHEET A-001 FOR ARCHITECTURAL GENERAL NOTES, & ANNOTATION LEGEND.
2 REFER TO SHEET A-002 FOR TYPICAL ADA DETAILS.

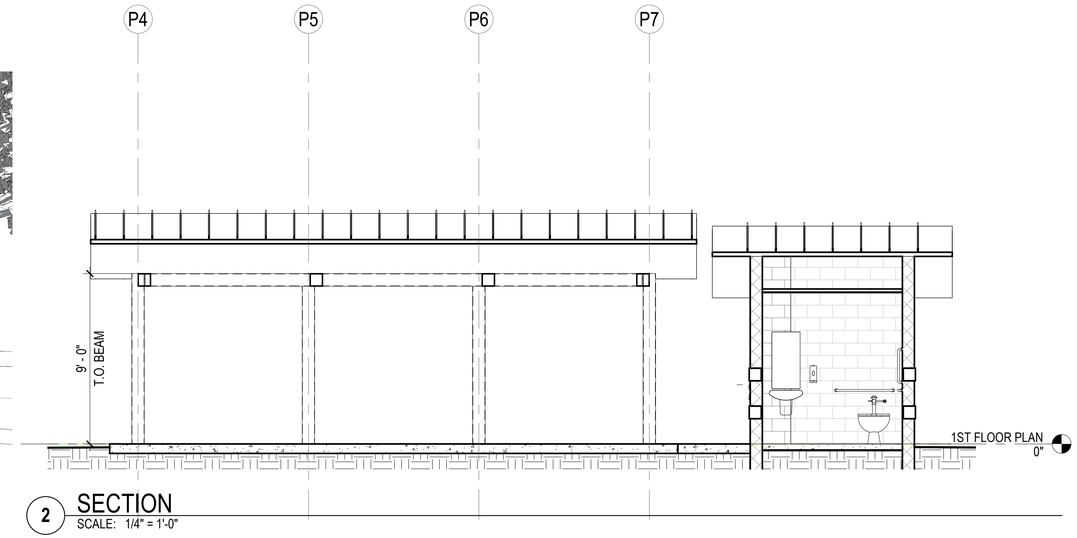

2 SECTION
SCALE: 1/4" = 1'-0"

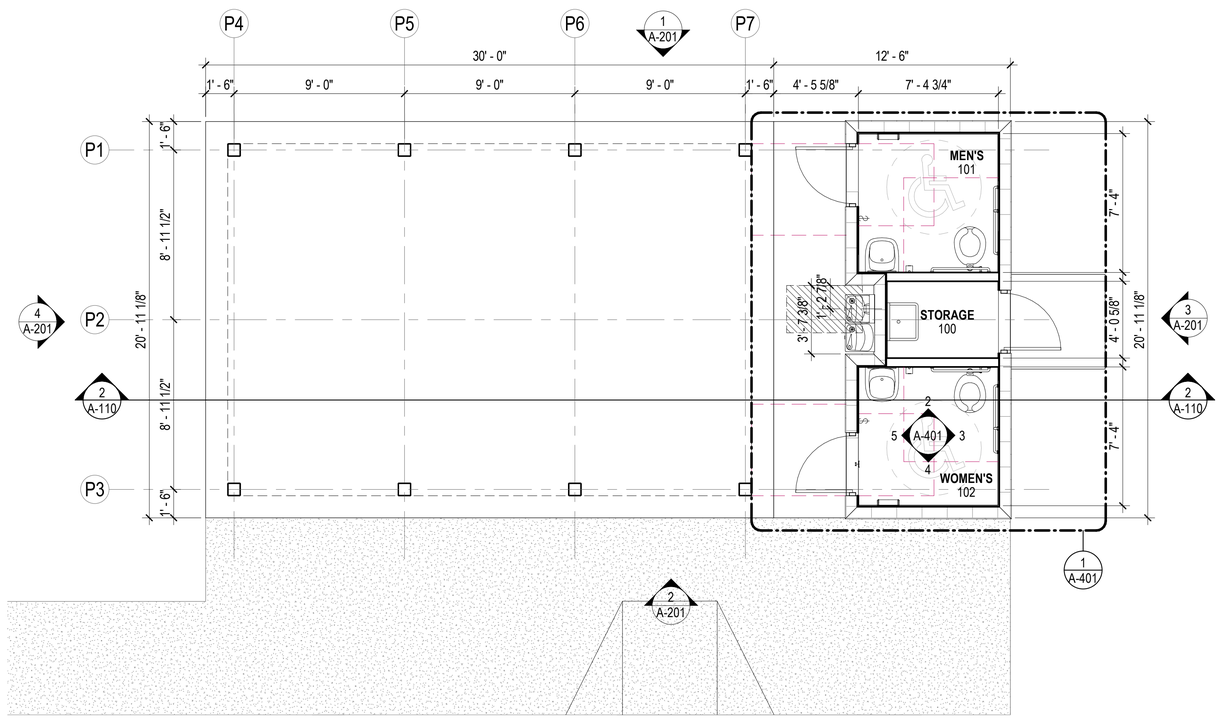

1 FLOOR PLAN
SCALE: 1/4" = 1'-0"

CITY OF KEYSTONE HEIGHTS
"IN GOD WE TRUST"
SINCE 1925

Michael Baker
INTERNATIONAL
12740 GRAN BAY PARKWAY WEST
SUITE 2110, JACKSONVILLE, FL 32258
(904) 380-2500

Designer: ADB	Checked by: WJB
Technician:	Baker Project No: 175439

Keynote/Notes:

NO.	DATE	DESCRIPTION

REVISIONS

Project Name:
CITY OF KEYSTONE HEIGHTS TRAIL HEAD

Drawing Name:
COMPREHENSIVE - FLOOR PLAN

ARCHITECT OF RECORD

Date: MARCH 2020
Scale: AS NOTED
Sheet #: A-110

NOTES - ROOF PLANS

1. REFER TO MECHANICAL, PLUMBING AND ELECTRICAL DRAWINGS FOR ADDITIONAL ROOF ELEMENT INFORMATION
2. CONTRACTOR SHALL COORDINATE EXACT LOCATION OF ROOF DRAINING TO MAKE SURE NOT TO INTERFERE WITH ANY STRUCTURAL MEMBERS - LEADERS SHALL BE LOCATED TO CLEAR AND SLOPE AS REQUIRED BY APPLICABLE CODES
3. CONTRACTOR TO VERIFY AND COORDINATE EXACT LOCATIONS OF PENETRATIONS SO AS NOT TO INTERFERE WITH MAJOR STRUCTURAL MEMBERS

KEYNOTES

1.01	ROOF - 24 GA GALVALUME ROOF SHEETING
1.02	ROOF - EAVE TRIM
1.03	ROOF - RIDGE CAP

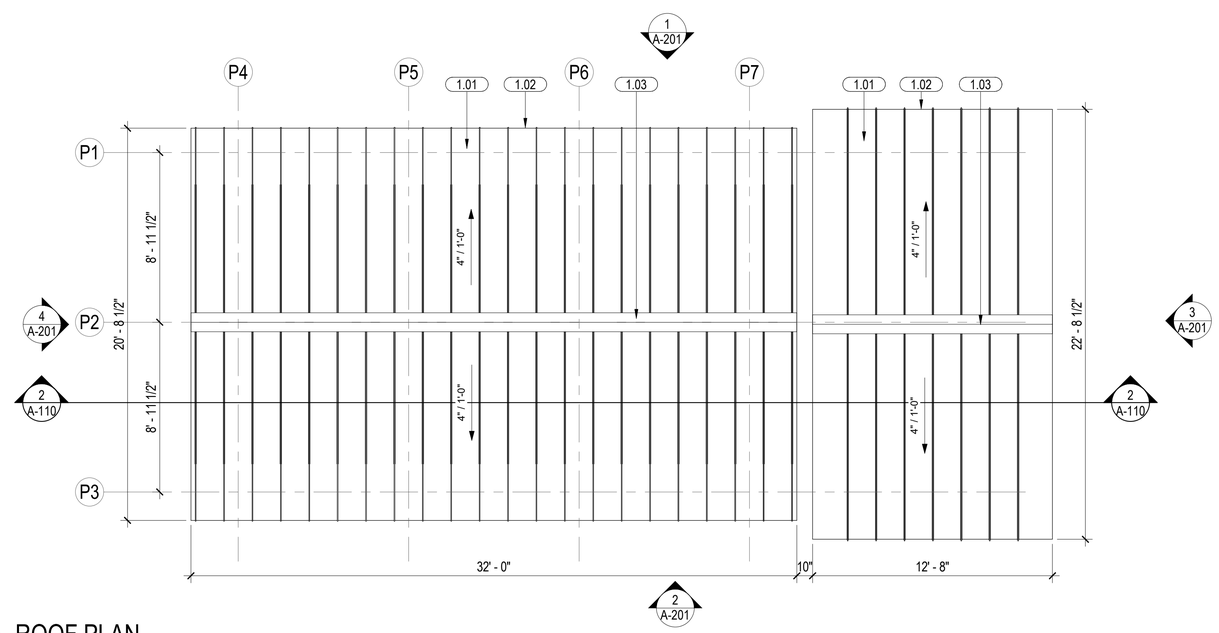

1 ROOF PLAN
SCALE: 1/4" = 1'-0"

Michael Baker INTERNATIONAL
12740 GRAN BAY PARKWAY WEST
SUITE 2110, JACKSONVILLE, FL 32258
(904) 380-2500

Designer: XXX	Checked by: XXX
Technician:	Baker Project No: 175439

Keynote/Notes:

NO.	DATE	DESCRIPTION

REVISIONS

Project Name:
CITY OF KEYSTONE HEIGHTS TRAIL HEAD

Drawing Name:
ROOF PLAN

ARCHITECT OF RECORD

Date: MARCH 2020	Sheet #: A-130
Scale: AS NOTED	

KEYNOTES	
1.01	ROOF - 24 GA GALVALUME ROOF SHEETING
2.01	WALLS - EXTERIOR WALL SPLIT-FACE CMU, EXPOSED
2.03	COLUMNS - STEEL
3.01	DOORS - EXTERIOR INSULATED METAL DOOR, PAINTED
4.01	ADA SIGNAGE, REFER T0 A-002 FOR MOUNTING HEIGHT

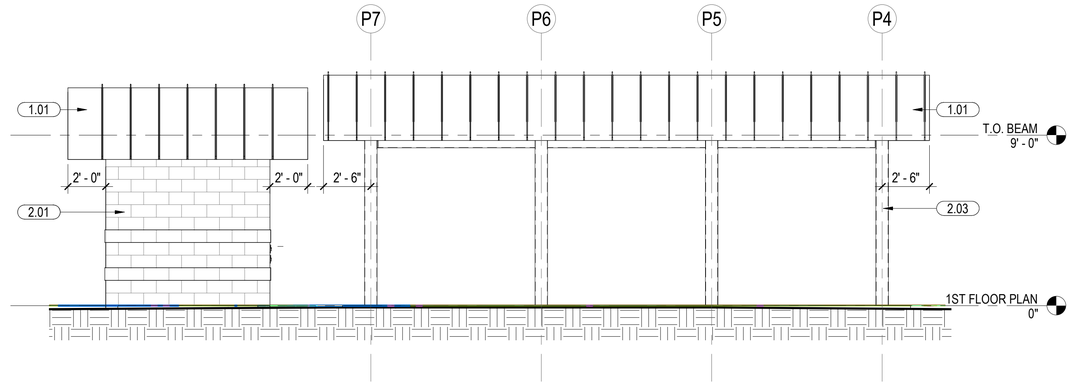

1 NORTH ELEVATION
SCALE: 1/4" = 1'-0"

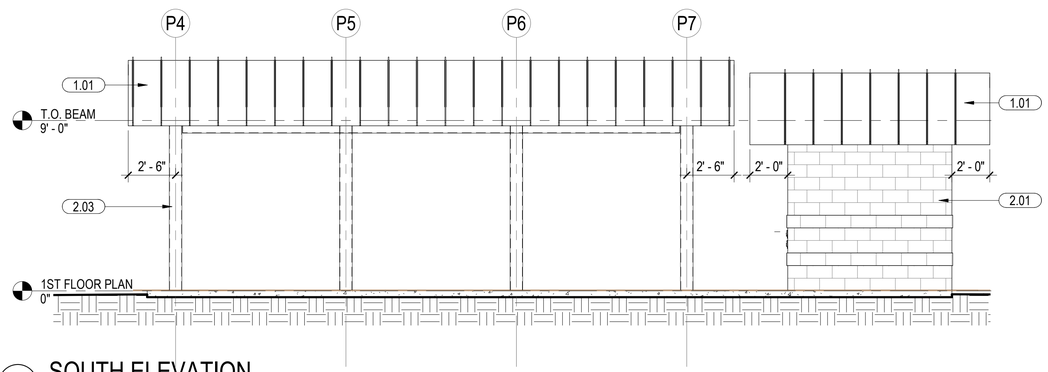

2 SOUTH ELEVATION
SCALE: 1/4" = 1'-0"

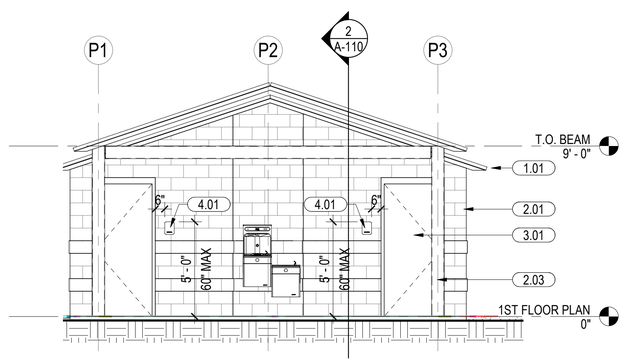

4 WEST ELEVATION
SCALE: 1/4" = 1'-0"

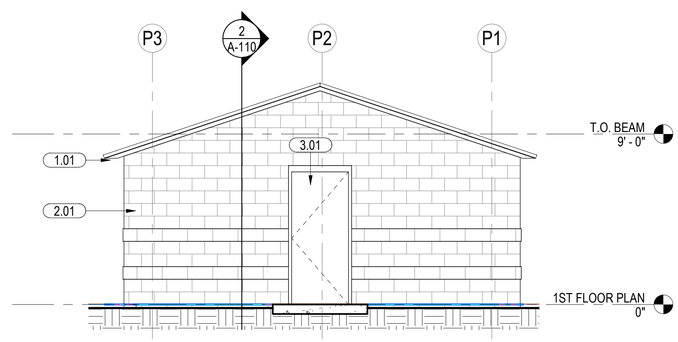

3 EAST ELEVATION
SCALE: 1/4" = 1'-0"

Michael Baker INTERNATIONAL
12740 GRAN BAY PARKWAY WEST
SUITE 2110, JACKSONVILLE, FL 32258
(904) 380-2500

Designer: ADB	Checked by: WJB
Technician:	Baker Project No: 175439

Keynote/Notes:

NO.	DATE	DESCRIPTION

REVISIONS

Project Name:
CITY OF KEYSTONE HEIGHTS TRAIL HEAD

Drawing Name:
EXTERIOR ELEVATIONS

ARCHITECT OF RECORD

Date: MARCH 2020	Sheet #: A-201
Scale: AS NOTED	

HARDWARE SET #: 1

TOT QTY	QTY	UOM	MANF	ITEM TYPE	ITEM SERIES/DESC	FINISH
3	3	EA	IVES	HINGE	3CB1 4.5 X 4.5	652
1	1	EA	SAR	CYLINDER - MORTISE	6042 1-1/4" LENGTH	630
1	1	EA	SAR	MORTISE PRIVACY	8265-49 LW1J W/ INDICATOR	626
1	1	EA	SAR	CORE	6300 LA	US15
1	1	EA	IVES	KICK PLATE	8400 10 X 34 B4E	630
1	1	EA	IVES	WALL BUMPER	WS406CCV	630
1	1	EA	IVES	SILENCER	SR64	GRY

SCHEDULE - DOOR

DOOR NUMBER	ROOM NAME	ROOM NUMBER	SIZE HEIGHT	SIZE WIDTH	SIZE THICKNESS	DOOR TYPE	DOOR DESCRIPTION	DOOR FINISH	FRAME TYPE	FRAME DESCRIPTION	FRAME FINISH	DETAILS HEAD	DETAILS JAMB	RATINGS FIRE	RATINGS STC	HARDWARE SET	COMMENTS
100A	STORAGE	100	7' - 0"	3' - 0"	44 mm	A	INS METAL DOOR	P	F1	HM	P	2/A-611				1	
101A	MEN'S	101	7' - 0"	3' - 0"	44 mm	A	INS METAL DOOR	P	F1	HM	P	2/A-611				1	
102A	WOMEN'S	102	7' - 0"	3' - 0"	44 mm	A	INS METAL DOOR	P	F1	HM	P	2/A-611				1	

TOILET ACCESSORIES

A	SINK WITH KNEE GUARD - AMERICAN STANDARD
B	FLOOR MOUNTED FLUSH VALVE TOILET - AMERICAN STANDARD
C	AUTOMATIC WALL MOUNTED LIQUID SOAP DISPENSER - BOBRICK B-2012
D	1/4" POLISHED FLOAT GLASS MIRROR WITH STAINLESS STEEL CHANNEL FRAME, 36X18
E	1) 36" REAR 2) 24" VERTICAL 3) 48" SIDE GRAB BARS
F	RECESSED SANITARY NAPKINI DISPOSAL AND TOILET TISSUE DISPENSER
G	SURFACE MOUNTED AUTOMATIC HAND DRYER - BOBRICK B-7120 208-240V
H	SURFACE MOUNTED DOUBLE ROBE HOOK - BOBRICK B-672
J	WALL MOUNTED SERVICE SINK - AMERICAN STANDARD
K	VANDAL RESISTANT BOTTLE FILLING STATION AND BI-LEVEL REVERSE COOLER NON-FILTERED NON-REFRIGERATED SS DRINKING FOUNTAIN - ELKAY

KEYNOTES

2.02	WALLS - INTERIOR CMU, EXPOSED

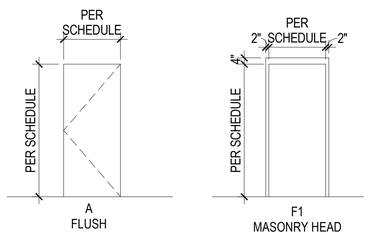

8 DOOR & FRAME TYPES
SCALE: 1/4" = 1'-0"

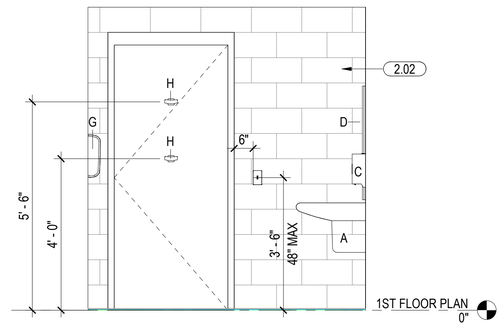

5 INTERIOR ELEVATION - TOILET, WEST
SCALE: 1/2" = 1'-0"

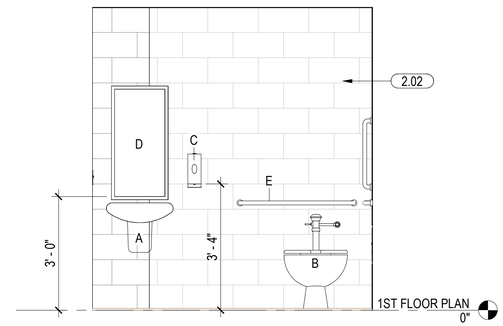

2 INTERIOR ELEVATION - TOILET, NORTH
SCALE: 1/2" = 1'-0"

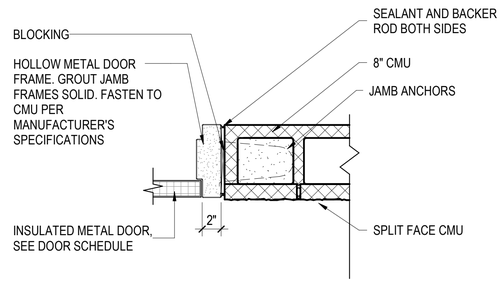

7 HM FRAME AT CMU JAMB DETAIL
SCALE: 1 1/2" = 1'-0"

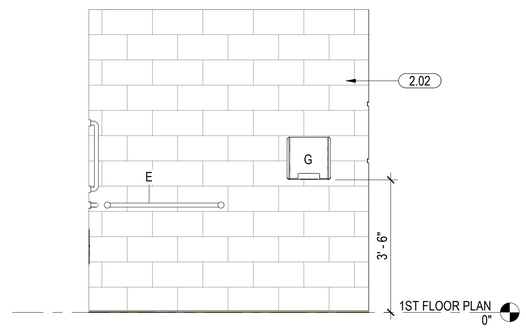

4 INTERIOR ELEVATION - TOILET, SOUTH
SCALE: 1/2" = 1'-0"

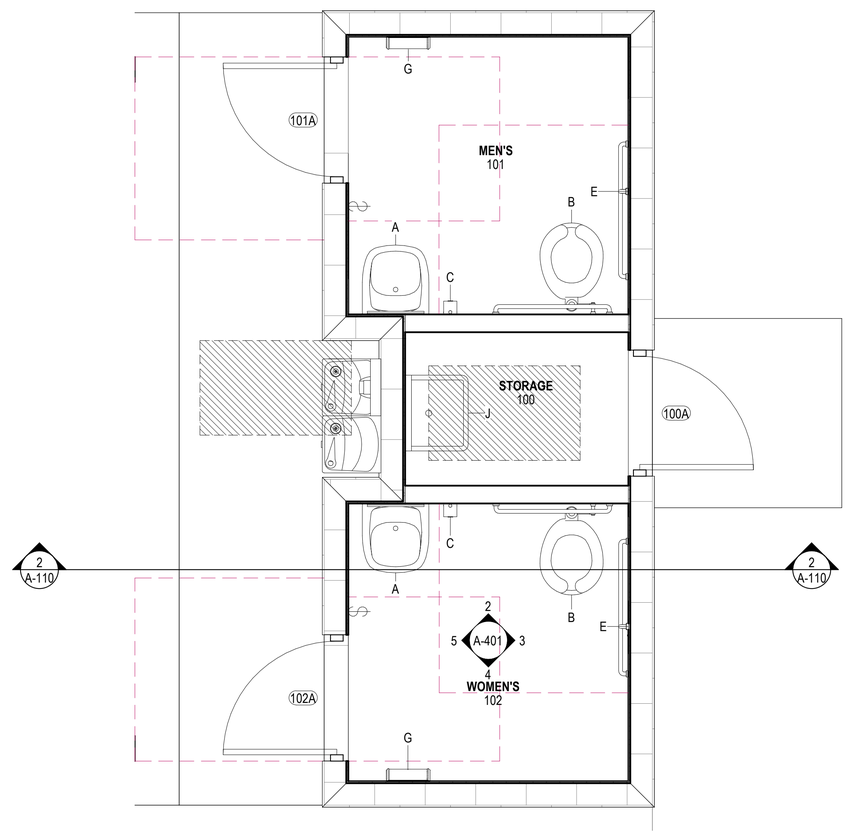

1 ENL FLOOR PLAN - TOILET ROOMS
SCALE: 1/2" = 1'-0"

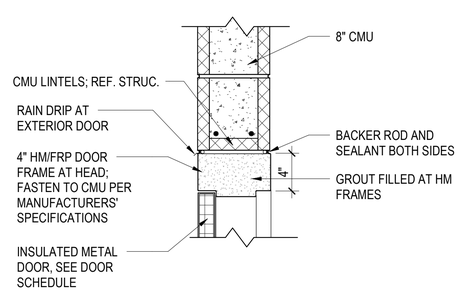

6 HM FRAME AT CMU HEAD DETAIL
SCALE: 1 1/2" = 1'-0"

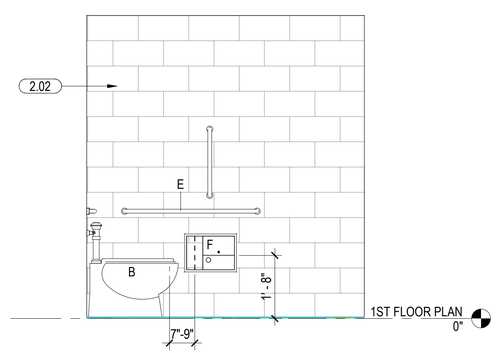

3 INTERIOR ELEVATION - TOILET, EAST
SCALE: 1/2" = 1'-0"

Michael Baker INTERNATIONAL
12740 GRAN BAY PARKWAY WEST
SUITE 2110, JACKSONVILLE, FL 32258
(904) 380-2500

Designer: XXX	Checked by: XXX
Technician:	Baker Project No: 175439

Keynote/Notes:

NO.	DATE	DESCRIPTION

REVISIONS

Project Name:
CITY OF KEYSTONE HEIGHTS TRAIL HEAD

Drawing Name:
ENLARGED TOILET ROOMS

ARCHITECT OF RECORD

Date: MARCH 2020
Scale: AS NOTED
Sheet #: A-401

DESIGN SPECIFICATIONS:

DESIGN CODE: 2017 FLORIDA BUILDING CODE (FBC) RESIDENTIAL WITH LATEST SUPPLEMENTS
OCCUPANCY: RESIDENTIAL GROUP R–3 (ONE AND TWO–FAMILY DWELLINGS)
CONSTRUCTION: TYPE V, UNPROTECTED
BASIC WIND SPEED: V_{ult}= 125 MPH V_{asd}= $0.6*(V_{ult})^{1/2}$
RISK CATEGORY: II
WIND EXPOSURE: C
INTERNAL PRESSURE COEFFICIENT: ± 0.18 ENCLOSED BUILDING

COMPONENT & CLADDING DESIGN			
WIND PRESSURES (PSF)			
ROOF			
	AREA		
ZONE	10 SF	50 SF	100 SF
POSITIVE ALL ZONES	+17.5	+16.0	+16.0
1	-27.8	-26.0	-25.2
2	-48.4	-39.4	-35.6
3	-71.6	-60.8	-56.2
WALLS			
	AREA		
ZONE	10 SF	100 SF	500 SF
POSITIVE ALL ZONES	+30.4	+25.9	+22.7
4	-33.0	-28.4	-25.2
5	-40.7	-31.6	-25.2

NOTES:
1) TABLE PRESSURES ARE FOR THE SQUARE FOOT (SF) TRIBUTARY AREA SHOWN. FOR OTHER TRIBUTARY AREAS, LINEARLY INTERPOLATE BETWEEN VALUES SHOWN ABOVE.
2) POSITIVE PRESSURES ACT TOWARD THE BUILDING. NEGATIVE PRESSURES ACT AWAY FROM THE BUILDING.
3) SEE DIAGRAMS FOR ZONE LOCATIONS.
4) ALL PRESSURES SHOWN IN ARE ULTIMATE PRESSURES.
5) TO OBTAIN ALLOWABLE WIND PRESSURE VALUES, MULTIPLY VALUES SHOWN ON TABLE x 0.6 $WIND_{ALW.}$ = 0.6 $WIND_{ULT.}$

a= 4.1 ft

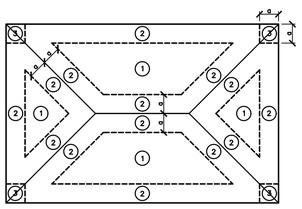

ROOF PLAN (GENERIC BUILDING SHOWN)

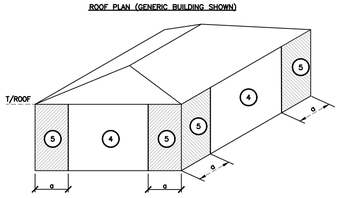

WALLS (GENERIC BUILDING SHOWN)

DESIGN LIVE LOADS:

ROOF:..... 20 PSF

DESIGN DEAD LOADS:

ROOF:..... 15 PSF

GENERAL NOTES:

1. CODES USED: 2017 FLORIDA BUILDING CODE, ACI, NDS, APA AND ASCE–7–10. ALL LATEST EDITIONS USED.
2. ALL DESIGN, CONSTRUCTION AND MATERIALS SHALL BE IN ACCORDANCE WITH APPLICABLE CODES AND AUTHORITIES HAVING JURISDICTION OVER THE WORK.
3. CONTRACTOR SHALL VERIFY DIMENSIONS AND CONDITIONS AT THE JOB SITE PRIOR TO COMMENCING CONSTRUCTION.
4. DETAILS FOUND WITHIN THESE DRAWINGS SHALL BE ASSUMED TO BE TYPICAL DETAILS FOR THIS JOB ONLY. DETAILS SHALL GOVERN CONSTRUCTION FOR THIS JOB UNLESS OTHERWISE NOTED ON THE PLANS.
5. DIMENSIONS ARE SHOWN FOR REFERENCE ONLY. REFER TO ARCHITECTURAL PLANS FOR ALL DIMENSIONS. IF DIMENSIONS CANNOT BE DETERMINED FROM THE ARCHITECTURAL PLANS, CONTACT THE ENGINEER OF RECORD.

WATERPROOFING:

IT SHOULD BE NOTED THAT THE EOR IS NOT A WATER INTRUSION EXPERT. THE FLASHING AND WATER INTRUSION PROTECTION ELEMENTS FOR THE STRUCTURE ARE THE RESPONSIBILITY OF THE ARCHITECT OF RECORD.

SOILS:

A. MAX. DESIGN ALLOWABLE SOIL BEARING CAPACITY = 1500 PSF
B. SOIL PREPARATIONS NOTED IN SAID REPORT SHALL BE FOLLOWED UNLESS MORE STRINGENT DESIGN IS SPECIFIED WITHIN THESE PLANS. THE FILL BELOW THE FOUNDATION SHOULD BE FREE OF DEBRIS, ORGANIC MATERIAL, COHESIVE SOILS OR ANY OTHER DELETERIOUS MATERIAL.
C. SOIL MUST BE COMPACTED TO 95% MODIFIED PROCTOR MAXIMUM DRY DENSITY FOR A DEPTH OF 2'–0" BELOW THE BOTTOM OF THE FOOTING.

FOOTING AND FOUNDATIONS:

FOOTINGS AND FOUNDATIONS SHALL BE IN ACCORDANCE WITH FBC AND AS NOTED IN THESE PLANS. WELDED WIRE REINFORCING (WWR): SHALL BE ASTM A185, FURNISH IN FLAT SHEET.

CONCRETE:

CAST–IN–PLACE CONCRETE: SHALL HAVE A COMPRESSIVE STRENGTH OF 2500 PSI AT 28 DAYS. CONCRETE AND STEEL REINFORCEMENT SHALL BE IN ACCORDANCE WITH FBC.

GROUT:

THE GROUT SHALL BE IN ACCORDANCE WITH ASTM C476 AND SHALL HAVE A MAXIMUM COURSE AGGREGATE SIZE OF 3/8" PLACED AT AN 8" TO 11" SLUMP AND HAVE A MINIMUM SPECIFIED COMPRESSIVE STRENGTH OF 2000 PSI AT 28 DAYS WHEN TESTED IN ACCORDANCE WITH ASTM C1019.

SLAB ON GRADE:

UNLESS NOTED OTHERWISE ON THE PLANS, SLAB THICKNESS IS 4". SLAB SHALL BE POURED OVER A 10 MIL. VAPOR BARRIER AND THE SOIL SHALL BE PREPARED FOR TERMITE PREVENTION PRIOR TO POURING. 6x6 W1.4xW1.4 WWF TO BE PLACED IN THE CENTER OF THE SLAB. WWF SHALL BE LAPPED 8". THE USE OF FIBERMESH SHALL BE ALLOWED IN LIEU OF WWF. MINIMUM FIBER LENGTH = 1/2".

STEEL REINFORCEMENT:

A. STEEL REINFORCEMENT SHALL BE IN ACCORDANCE WITH FBC, ACI 318 AND AS NOTED IN THESE PLANS.
B. STEEL REINFORCEMENT SHALL BE ASTM A615, GRADE 60
C. CONCRETE COVER SHALL BE IN ACCORDANCE WITH FBC AND AS FOLLOWS:
   - 3" FOR CONCRETE CAST AGAINST AND PERMANENTLY EXPOSED TO EARTH
   - 2" FOR CONCRETE EXPOSED TO WEATHER OR IN CONTACT WITH GROUND
   - 1–1/2" FOR CONCRETE NOT EXPOSED TO WEATHER OR IN CONTACT WITH GROUND
D. VERTICAL AND HORIZONTAL REINFORCEMENT WILL BE LAPPED FOR 36 BAR DIAMETERS OR 24", WHICHEVER IS GREATER. CORNER REINFORCEMENT SHALL BE LAPPED 30".
E. ALL REINFORCING STEEL SHALL BE PLACED IN ACCORDANCE WITH THE TYPICAL BENDING DIAGRAMS AND PLACING DETAILS OF ACI STANDARDS.
F. ALL REINFORCING STEEL SHALL BE HELD SECURELY IN POSITION WITH STANDARD ACCESSORIES DURING PLACING OF CONCRETE.
G. SPLICES IN REINFORCING, WHERE PERMITTED, SHALL BE AS FOLLOWS: MASONRY: 48 BAR DIAMETER.

WOOD:

A. WOOD FRAMING SHALL BE IN ACCORDANCE WITH FBC, EXCEPT AS NOTED IN THESE PLANS.
B. THE FLOOR ASSEMBLY (INCLUDING POSTS, JOISTS, AND SUBFLOORS) FOR THE FOLLOWING CONDITIONS SHALL BE PRESSURE TREATED:
   1. WOOD JOISTS CLOSER THAN 18" TO THE EXPOSED GROUND
   2. THE BOTTOM OF WOOD STRUCTURAL FLOORS WITHOUT JOISTS ARE CLOSER THAN 18" TO EXPOSED GROUND
   3. WOOD JOISTS GIRDERS CLOSER THAN 12" TO THE EXPOSED GROUND
   4. UNEXCAVATED AREAS LOCATED WITHIN THE PERIMETER OF THE BUILDING FOUNDATION
   5. ALL WOOD IN DIRECT CONTACT WITH CONCRETE OR MASONRY

** ALL PRESSURE TREATED WOOD, (I.E. FLOOR JOISTS, RAFTER TAILS, ETC.) SHALL BE PROTECTED FROM TOUCHING TRUSS PLATES, TRUSS HANGERS, ETC. WITH EITHER 3/4" PLY, FELT OR APPROVED EQUAL.

ROOF AND CEILING FRAMING:

1. ROOF ASSEMBLIES SHALL BE IN ACCORDANCE WITH FBC.
2. ALL CONVENTIONAL FRAMING SHALL BE SYP #2.
3. REFER TO TRUSS SHOP DRAWINGS FOR TRUSS DETAILS.
4. PROVIDE 1X4 PURLIN BRACING ABOVE THE BOTTOM CHORD OF ROOF TRUSSES AT THE SPACING INDICATED IN THE SHOP DRAWINGS. FASTEN W/ (2) 6D NAILS AT EACH TRUSS.
5. PROVIDE SOLID BLOCKING AT ROOF SHEATHING JOINTS IN THE FIRST TWO RAFTERS OR TRUSS SPACES FROM THE GABLE ENDS.

ROOF SHEATHING AND DIAPHRAGM ATTACHMENT:

USE MIN. 1/2" APA RATED SHEATHING FASTENED W/ 8d RINGSHANK NAILS @ 6" OC EDGES, 6" OC INTERMEDIATE.

GABLE ENDWALLS:

PROVIDE PLATFORM FRAMING IN ATTIC OR BALLOON FRAME WALL STUDS AT ALL GABLE ENDS, SEE PLANS.

METAL CONNECTORS:

1. ALL METAL CONNECTORS SHALL BE SIMPSON STRONG–TIE CONNECTORS UNLESS OTHERWISE APPROVED BY THE ENGINEER OF RECORD (E.O.R.)
2. ALL METAL CONNECTORS EXPOSED TO EXTERIOR TREATED WOOD (I.E. ACQ TREATED, BORATE, ETC.) SHALL STAINLESS STEEL U.N.O.
3. ALL NAILS EXPOSED TO EXTERIOR SHALL STAINLESS STEEL U.N.O. ALL NAILS EXPOSED TO FIRE–TREATED LUMBER SHALL BE STAINLESS STEEL.

ANCHOR BOLTS:

ANCHOR BOLTS SHALL BE IN ACCORDANCE WITH ASTM A307 OR ASTM F1554 GRADE 36. WASHERS: SHALL BE IN ACCORDANCE WITH ASTM F436 GRADE 36. NUTS: SHALL BE IN ACCORDANCE WITH ASTM A563 GRADE A HEX.

TYPICAL ANCHOR BOLTS ARE REQUIRED AT THE FOLLOWING LOCATIONS:
- SPACED @ 32" OC AT EXTERIOR WALL SILL PLATES.
- AT THE EXTERIOR WALL SILL PLATES WHERE THE THREADED ROD IS MORE THAN 6" FROM THE END OF THE PLATE.
- ANCHOR BOLTS ARE NOT REQUIRED AT INTERIOR BEARING WALL SILL PLATES.
- ANCHOR BOLTS SHALL BE USED UNDERNEATH FIRST FLOOR WINDOWS ON EACH SIDE BELOW EACH OPENING.

EPOXY:

ANCHORING ADHESIVE: SHALL BE THE FOLLOWING PRODUCTS (DUAL CARTRIDGE INSTALLATION ONLY):
- SIMPSON STRONG–TIE CO., PRODUCT: EPOXY–TIE

PRE–ENGINEERED TRUSSES:

- THE PRE–ENGINEERED TRUSS LAYOUT ON THESE PLANS IS CONCEPTUAL. TRUSSES SHALL BE DESIGNED TO MATCH ORIENTATION, SPAN DIRECTION AND SPACING OF LAYOUT SHOWN ON PLAN THE EOR RESERVES THE RIGHT TO MAKE REVISIONS TO THESE PLANS BASED ON THE TRUSS REACTIONS AND LAYOUT.
- TRUSSES ARE TO BE DESIGNED UNDER THE GUIDANCE OF A REGISTERED FLORIDA PROFESSIONAL ENGINEER. ENGINEERING SHOP DRAWINGS SHALL BE SUBMITTED TO ENGINEER OF RECORD FOR APPROVAL PRIOR TO FABRICATION.

MASONRY:

A. MASONRY CONSTRUCTION SHALL BE IN ACCORDANCE WITH FBC AND IN ACCORDANCE WITH THE SPECIFICATIONS FOR MASONRY STRUCTURES, ACI 530.1–05.
B. ACI 3.5 D LIMITS THE GROUT LIFT HEIGHT TO 5' AND REQUIRES A 1–HOUR INITIAL SET TIME BETWEEN LIFTS.

MASONRY CONSTRUCTION:

A. CONCRETE MASONRY UNITS: SHALL BE HOLLOW UNIT MASONRY IN ACCORDANCE WITH ASTM C90 AND SHALL HAVE A MINIMUM NET AREA COMPRESSIVE STRENGTH OF 1,900 PSI WHEN USING TYPE M OR S MORTAR (ASTM C270) IN ACCORDANCE WITH ACI 530, THE 1,900 PSI BLOCK IN COMBINATION WITH TYPE M OR S MORTAR PROVIDES A DESIGN COMPRESSIVE STRENGTH ($F'M$) OF 1,500 PSI.
B. THE GROUT SHALL BE IN ACCORDANCE WITH ASTM C476 AND SHALL HAVE A MAXIMUM COURSE AGGREGATE SIZE OF 3/8" PLACED AT AN 8" TO 11" SLUMP AND HAVE A MINIMUM SPECIFIED COMPRESSIVE STRENGTH OF 2,000 PSI AT 28 DAYS WHEN TESTED IN ACCORDANCE WITH ASTM C1019. FINE GROUT SHALL ONLY BE ALLOWED WITH WRITTEN APPROVAL OF EOR.
C. DEFINITIONS:
   - GROUT POUR HEIGHT: THE TOTAL HEIGHT OF MASONRY TO BE GROUTED PRIOR TO ERECTION OF ADDITIONAL MASONRY.
   - GROUT POUR: CONSISTS OF ONE OR MORE GROUT LIFTS.
   - GROUT LIFT: THE LAYER OF GROUT PLACED IN A SINGLE CONTINUOUS OPERATION AND IS LIMITED TO 5 FEET (1524 MM).
   - RODDING: THE ACT OF COMPACTING FRESHLY POURED CONCRETE OR GROUT IN ITS FORM BY FREEING THE MASS OF AIR POCKETS WITH REPEATED STABS OF A ROD.
   - PUDDLING: THE PROCESS OF INDUCING COMPACTION OF GROUT BY USE OF A TAMPING ROD.
   - PUDDLE: THE ACT OF WORKING CONCRETE TO ELIMINATE HONEYCOMB, AND TO PRODUCE A DENSER MASS.
   - PUDDLE STICK: A STICK OR ROD USED TO CONSOLIDATE GROUT BY HAND.
D. MASONRY CONSTRUCTION AND INSPECTION GUIDELINES:
   1. LAY UP MASONRY IN RUNNING BOND FOR SIZES AND REINFORCING PER PLANS AND ELEVATIONS.
   2. FACE SHELLS OF BED JOINT SHALL BE MORTARED.
   3. WEBS SHALL BE MORTARED AT CELLS TO BE GROUTED.
   4. VERTICAL CELLS ARE TO BE ALIGNED WHERE THEY ARE TO BE GROUT FILLED UNLESS BOND IS SHIFTED DUE TO SITE CONDITIONS.
   5. INSTALL HORIZONTAL JOINT REINFORCING AT 16 INCHES (407 MM) ON CENTER STARTING FIRST BLOCK ABOVE FOUNDATION.
   6. MAINTAIN MINIMUM OF 1/2 INCH (12.7 MM) COVER ON JOINT REINFORCING TO EXTERIOR AND REINFORCING SHALL BE EMBEDDED IN MORTAR.
   7. GROUT SPACES BOTH VERTICAL AND HORIZONTAL ARE TO BE SUBSTANTIALLY FREE OF DROPPINGS, DEBRIS, LOOSE AGGREGATE AND ANY MATERIAL DELETERIOUS TO MASONRY GROUT.
   8. INSTALL REINFORCING IN GROUT CELLS PRIOR TO GROUTING.
   9. GROUT SPACES ARE TO BE INSPECTED PRIOR TO PLACING GROUT.
   10. FILL CELLS AS NOTED ON THE PLANS, ELEVATIONS AND DETAILS.
   11. PLACE GROUT IN LIFT TO 60 INCHES IN HEIGHT (CLEAN OUT HOLES ARE NOT REQUIRED).
   12. A REINFORCING BAR MAY BE USED TO ROD GROUT IN CELL, TO ENSURE THERE ARE NO VOIDS IN GROUT.
   13. PLACE REINFORCING APPROXIMATELY 1 INCH (25 MM) TO THE SIDE OF DOWEL IN CELL (ACI 530–1.12.3.3)
   14. GROUT SHOULD SET IN APPROXIMATELY 90 MINUTES DEPENDING ON GROUT SLUMP AND WEATHER CONDITIONS.
   15. DO NOT BEND OR MOVE REINFORCEMENT AFTER GROUT HAS SET.
   16. FILL ALL CELLS SOLID BELOW FINISH FLOOR ELEVATION.
   17. PROVIDE LEVEL "B" QUALITY ASSURANCE, AS PER ACI 530–05 TABLE 1.15.2.
E. TOLERANCES:
   4. CENTERLINE REINFORCING:
      4.1. CENTERLINE LOCATION SHOULD BE WITHIN 1/2 INCH (13 MM) OF CENTER OF MASONRY.
      4.2. HORIZONTAL LOCATION SHALL BE WITHIN 2 INCHES (51 MM) OF THE CENTER OF THE CELL.
      4.3. REINFORCING SHALL MAINTAIN POSITION WITHOUT BEING TIED.
      4.4. DO NOT MOVE REINFORCING AFTER INITIAL SET OF GROUT.
F. BOND BEAMS:
   1. HORIZONTAL REINFORCING SHALL BE 1/4 INCH (6 MM) CLEAR OF MASONRY FOR FINE GROUT AND 1/2 INCH (13 MM) FOR COARSE GROUT.
   2. KNOCK OUT WEB BLOCKS SHALL BE USED FOR BLOCK AT THE TIP AND/OR THE BOTTOM OF THE BOND BEAMS, DEPENDING ON THE LOCATION.
   3. WIRE MESH OT SOME OTHER MEANS SHALL BE USED TO PREVENT GROUT FROM ESCAPING FROM THE BOTTOM OF THE BOND BEAMS INTO CELLS WITHOUT VERTICAL REINFORCING.

CITY OF KEYSTONE HEIGHTS
SINCE 1925
"IN GOD WE TRUST"

Michael Baker INTERNATIONAL
12740 GRAN BAY PARKWAY WEST
SUITE 2110, JACKSONVILLE, FLORIDA 32258
(904) 380-2500
CORPORATE LICENSE NUMBER 00004307

Designer: CJR	Checked by: AT
Technician: CJR	Baker Project No: 175439

Keynote/Notes:

BID DOCUMENTS

REVISIONS

No.	Description	Date	By

Project Name:
CITY OF KEYSTONE HEIGHTS TRAIL HEAD

Drawing Name:
General Notes, Specifications & Design Criteria

BAKER Design Build
219 N. Newnan Street, 2nd Floor, Jacksonville FL 32202
p 904 356 8520 f 904 559 2678 bakerdesign.build
C.A. No. 32489

ENGINEER OF RECORD FAUSTO D. URIGUEN, P.E.
FL LICENSE NO. 80630

Date: MARCH 2020
Scale: AS SHOWN
Drawing Number: S0.1

Plotted on: 1/17/2020 2:04 PM By:Rick White
Located: P:\Engineering\PROJECTS\MICHAEL BAKER\19-0500 KEYSTONE HEIGHTS TRAIL HEAD\6-Structural\0-BDB Drawings\S0.1 GENERAL NOTES 19-0500.dwg

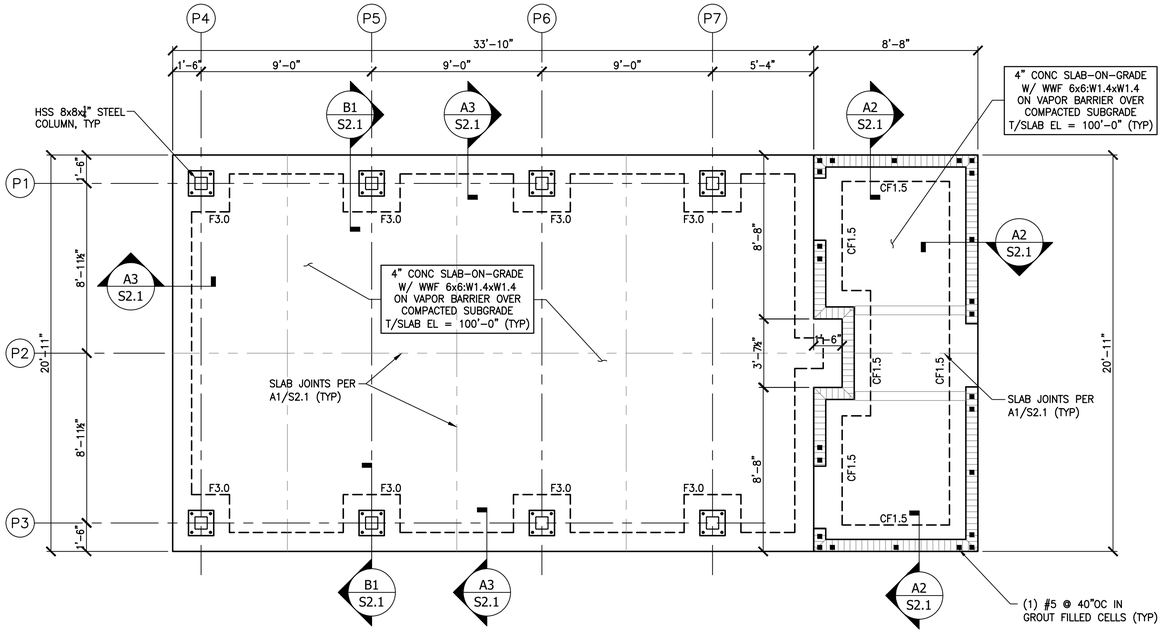

1 FOUNDATION & SLAB LAYOUT PLAN

1/4" = 1'-0"

FOUNDATION NOTES:

1. FOR "GENERAL NOTES", "DESIGN CRITERIA" & "DESIGN SPECIFICATIONS", SEE SHEET S0.1
2. REFER TO ARCH. FLOOR PLAN FOR WALL LOCATIONS & DIMS.
3. REFER TO SHEET NO. S2.1 FOR FOOTING SECTIONS AND DETAILS
4. ALL ELEVATIONS ARE BASED ON A DATUM T/ SLAB ELEVATION OF 100'–0". COORD ACTUAL ELEVATION W/ CIVIL.
5. FOOTINGS AND FOUNDATIONS SHALL BE IN ACCORDANCE WITH FBC CHAPTER 18
6. A SOILS INVESTIGATION REPORT IS RECOMMENDED TO VERIFY SUITABLE SUBSURFACE CONDITIONS
7. ALLOWABLE SOIL BEARING CAPACITY = 1,500 PSF
8. SOIL COMPACTION AND FILL SHALL BE IN ACCORDANCE WITH FBC 1804.3 AND SHALL BE COMPACTED TO A MINIMUM OF 95% MODIFIED PROCTOR IN ACCORDANCE WITH ASTM D1557.
9. DENOTES 8" CMU WALL LOCATION. SEE PLAN NOTES & GEN. NOTES FOR TYP REINF REQUIREMENTS.

FOOTING SCHEDULE

TYPE	LENGTH	WIDTH	DEPTH	BOTTOM REINF		REMARKS
				LONG WAY	SHORT WAY	
CF1.5	CONT	1'–6"	1'–4"	2–#5	#4@24" OC.	CONT.
F3.0	3'–0"	3'–0"	1'–4"	4–#5	4–#5	TOP & BOTT.

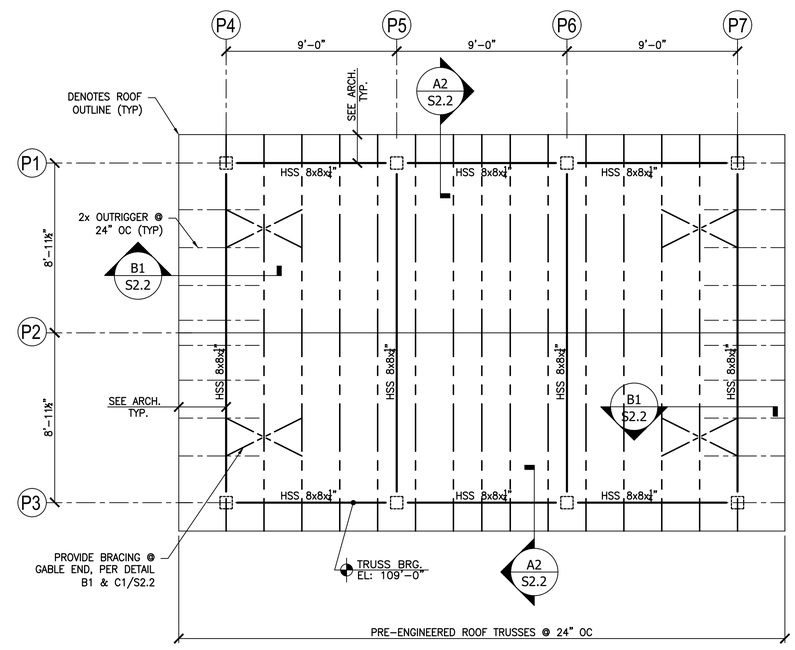

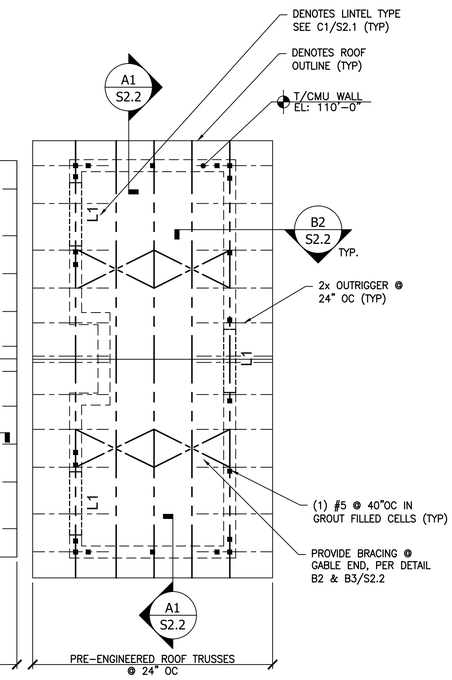

TRUSS SHOP DRAWING NOTE:

THE CONTRACTOR SHALL PROVIDE PRE–ENGINEERED TRUSS PLANS TO THE E.O.R. FOR REVIEW & APPROVAL PRIOR TO CONSTRUCTION. THE TRUSS LAYOUT IN THIS PLAN IS CONCEPTUAL ONLY. THE E.O.R. RESERVES THE RIGHT TO MAKE REVISIONS TO THIS PLAN BASED ON THE TRUSS REACTIONS & FINAL LAYOUT.

2 ROOF FRAMING LAYOUT PLAN

1/4" = 1'-0"

PLAN NOTES:

1. FOR "GENERAL NOTES", "DESIGN CRITERIA" & "DESIGN SPECIFICATIONS", SEE SHEET S0.1.
2. FOR TYPICAL FOUNDATION SECTIONS & DETAILS, SEE SHEET S2.1.
3. FOR TYPICAL FRAMING DETAILS SEE SHEET S2.2.
4. COORD. TRUSS BRG ELEVATIONS AND SLOPE W/ ARCH. ARCH ELEVS. WILL CONTROL.
5. TRUSS LAYOUT IS DIAGRAMMATIC ONLY. FINAL LAYOUT IS THE RESPONSIBILITY OF THE TRUSS SUPPLIER.
6. ROOF SHEATHING SHALL BE MIN ½" APA RATED PLYWOOD. SEE GEN NOTES FOR ATTACHMENT TO STRUCTURE.
7. SEE SHEET S2.2 FOR TYP DECK ATTACHMENT DETAIL. SEE GENERAL NOTES FOR NAIL SPEC AND SPACING.

STRUCTURAL DESIGN BASED ON ARCHITECTURAL PLANS PROVIDED BY:
MICHAEL BAKER INTERNATIONAL DATED 1.07.2020

THESE STRUCTURAL PLANS WERE PREPARED WITH CAD FILES OF THE ARCHITECTURAL FLOOR PLANS PROVIDED BY THE ARCHITECT. ENGINEER OF RECORD ASSUMES NO RESPONSIBILITY FOR THE DIMENSIONAL ACCURACY OF THESE PLANS AND RECOMMENDS THAT CONTRACTOR REVIEWS THESE STRUCTURAL WITH CLIENT FOR APPROVAL OF DIMENSIONING PRIOR TO CONSTRUCTION. CONTRACTOR SHALL VERIFY ALL DIMS. AND NOTIFY E.O.R. IF ASSUMPTIONS OR INFORMATION IS INCORRECT.
THE E.O.R. SHALL BE NOTIFIED IF EXISTING SITE CONDITIONS DEVIATE FROM ORIGINAL PLANS PROVIDED TO BAKER DESIGN BUILD, LLC., OR IF CHANGES ARE MADE FROM ORIGINAL ARCHITECTURAL DESIGN.

Plotted on: 1/17/2020 2:04 PM By:Rick White
Located: P:\Engineering\PROJECTS\MICHAEL BAKER\19-0500 KEYSTONE HEIGHTS TRAIL HEAD\6-Structural\0-BDB Drawings\S1.0 PLANS 19-0500.dwg

CITY OF KEYSTONE HEIGHTS
"IN GOD WE TRUST"
SINCE 1925

Michael Baker INTERNATIONAL
12740 GRAN BAY PARKWAY WEST
SUITE 2110, JACKSONVILLE, FLORIDA 32258
(904) 380-2500
CORPORATE LICENSE NUMBER 00004307

Designer: CJR	Checked by: AT
Technician: CJR	Baker Project No: 175439

Keynote/Notes:

BID DOCUMENTS

REVISIONS

No.	Description	Date	By

Project Name:

CITY OF KEYSTONE HEIGHTS TRAIL HEAD

Drawing Name:

Foundation & Roof Framing Layout Plans

BAKER Design Build
219 N. Newnan Street, 2nd Floor, Jacksonville FL 32202
p 904 356 8520 f 904 559 2678 bakerdesign.build
C.A. No. 32489

ENGINEER OF RECORD FAUSTO D. URIGUEN, P.E.
FL LICENSE NO. 80630

Date: MARCH 2020
Scale: AS SHOWN
Drawing Number: S1.0

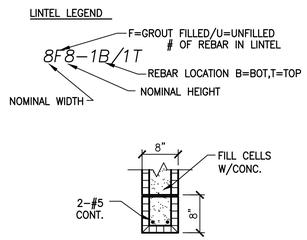

MASONRY OPENING 5'–4" OR LESS
MIN. BRG. 8" EA. END
(ATL. 8F8–1B/1T)

L1

MASONRY LINTEL DETAIL (C1)

SCALE: 3/4"=1'–0"

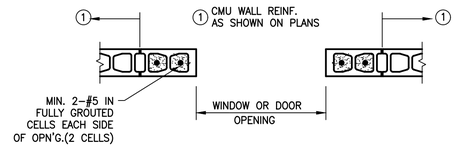

MASONRY JAMB DETAIL
AT OPENINGS < 14'–0"

TYP. CMU JAMB JOINTS (C2)

SCALE: 3/4"=1'–0"

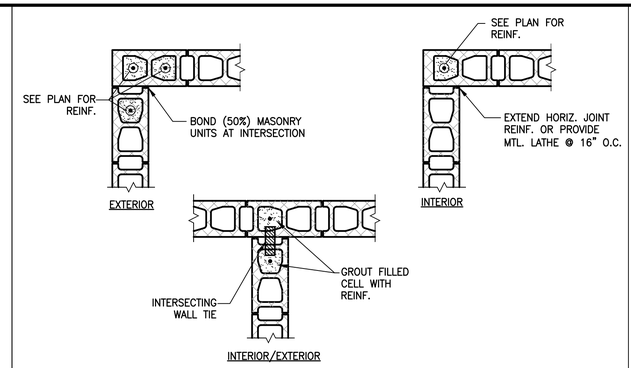

TYP. C.M.U. CORNER JOINTS (C3)

SCALE: 3/4"=1'–0"

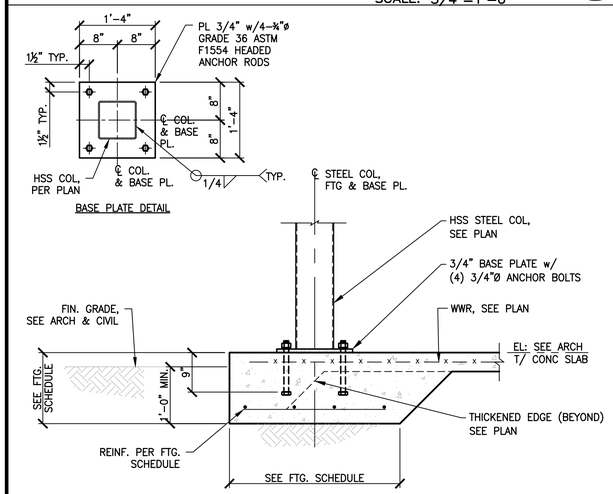

CONCRETE FOOTING DETAIL @ PAVILION AREA (B1)

SCALE: 3/4"=1'–0"

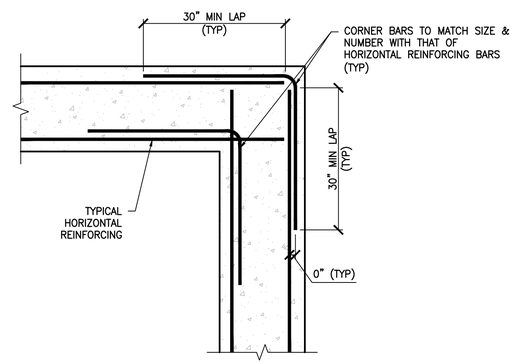

TYPICAL FOOTING CORNER (B2)

SCALE: 3/4"=1'–0"

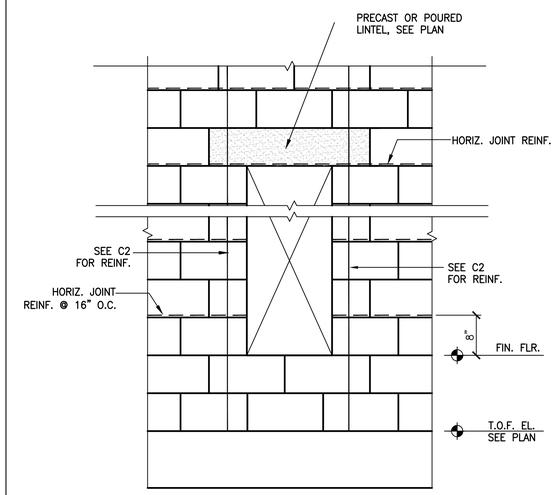

MASONRY REINF. @ DOOR OPNG. @ BATHROOM AREA (B3)

SCALE: 3/4"=1'–0"

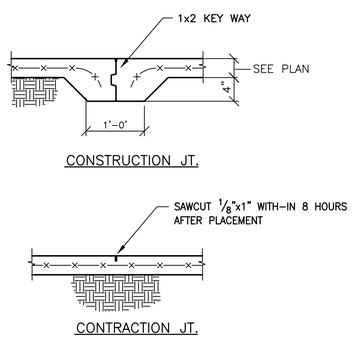

NOTE: CONTRACTION JOINTS MAY BE SUBSTITUTED WITH CONSTRUCTION JOINTS AT CONTRACTOR'S OPTION

SLAB JOINT DETAILS @ BATHROOM/PAVILION AREA (A1)

SCALE: 3/4"=1'–0"

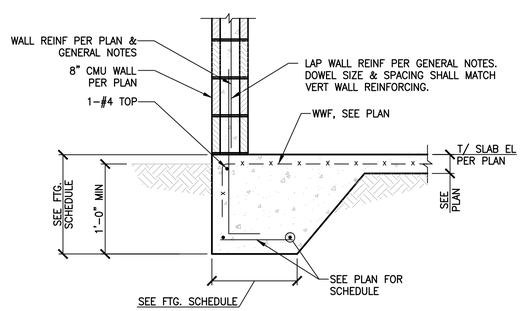

TYPICAL THICKENED EDGE WALL SECTION @ BATHROOMS (A2)

SCALE: 3/4"=1'–0"

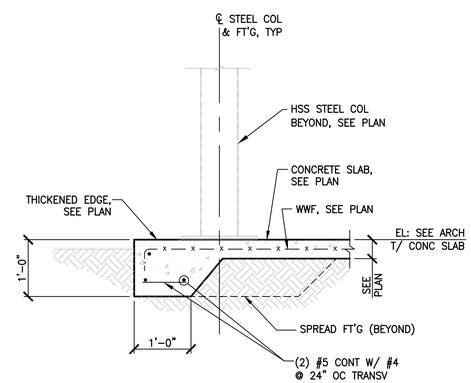

TYPICAL THICKENED EDGE @ PAVILION AREA (A3)

SCALE: 3/4"=1'–0"

CITY OF KEYSTONE HEIGHTS
"IN GOD WE TRUST"
SINCE 1925

Michael Baker INTERNATIONAL
12740 GRAN BAY PARKWAY WEST
SUITE 2110, JACKSONVILLE, FLORIDA 32258
(904) 380-2500
CORPORATE LICENSE NUMBER 00004307

Designer: CJR	Checked by: AT
Technician: CJR	Baker Project No: 175439

Keynote/Notes:

BID DOCUMENTS

REVISIONS

No.	Description	Date	By

Project Name:

CITY OF KEYSTONE HEIGHTS TRAIL HEAD

Drawing Name:

Sections & Details

BAKER Design Build
219 N. Newnan Street, 2nd Floor, Jacksonville FL 32202
p 904 356 8520 f 904 559 2678 bakerdesign.build
C.A. No. 32489

ENGINEER OF RECORD
FAUSTO D. URIGUEN, P.E.
FL LICENSE NO. 80630

Date: MARCH 2020

Scale: AS SHOWN

Drawing Number: S2.1

Plotted on: 1/17/2020 2:04 PM By:Rick White
Located: P:\Engineering\PROJECTS\MICHAEL BAKER\19-0500 KEYSTONE HEIGHTS TRAIL HEAD\6-Structural\0-BDB Drawings\S2.1 DETAILS 19-0500.dwg

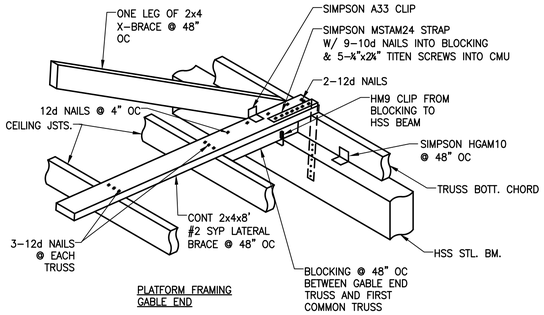

ISOMETRIC OF LATERAL BRACE @ GABLE PAVILLION

SCALE: 1/2"=1'-0"

C1

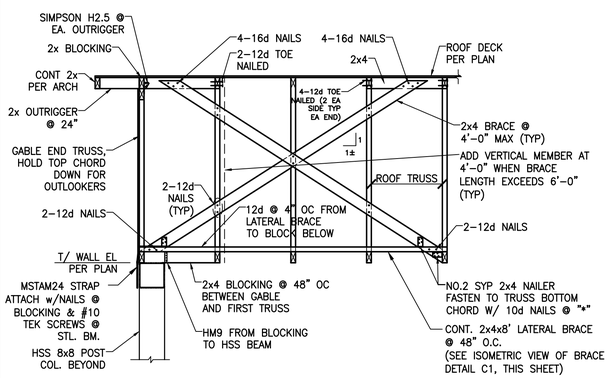

SECTION THRU' GABLE END WALL @ PAVILLION FRAMING

SCALE: 1/2"=1'-0"

B1

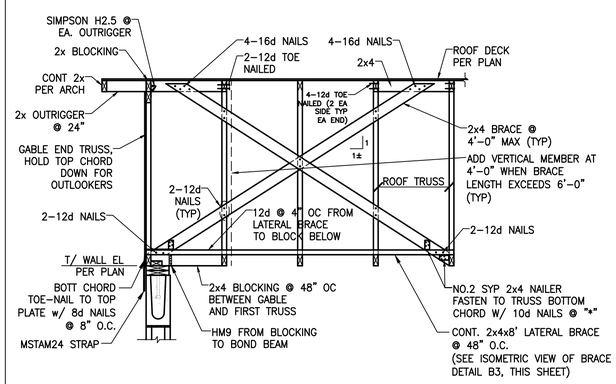

SECTION THRU' GABLE END WALL @ BATHROOM FRAMING

SCALE: 1/2"=1'-0"

B2

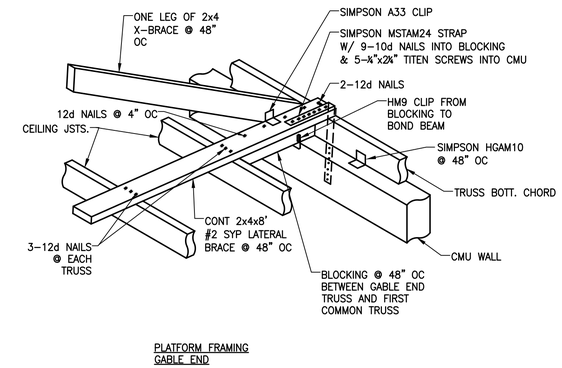

ISOMETRIC OF LATERAL BRACE @ GABLE END WALL

SCALE: 1/2"=1'-0"

B3

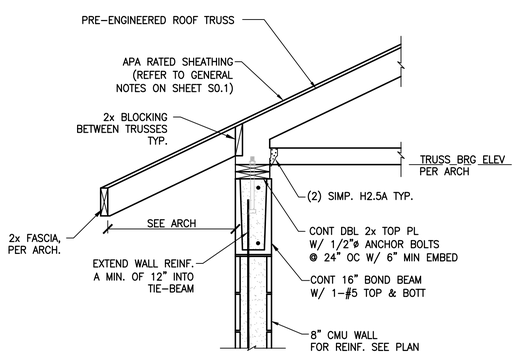

TYPICAL TRUSS TO CMU WALL CONN. @ BATHROOM AREA

SCALE: 3/4"=1'-0"

A1

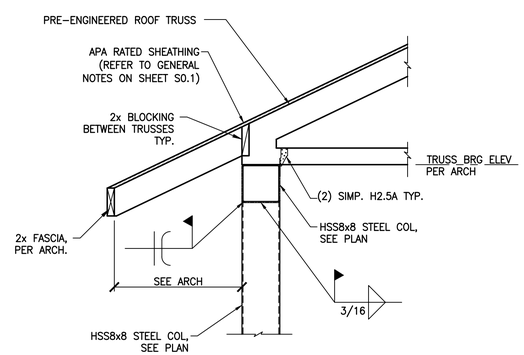

TRUSS TO HSS BEAM @ PAVILION

SCALE: 3/4"=1'-0"

A2

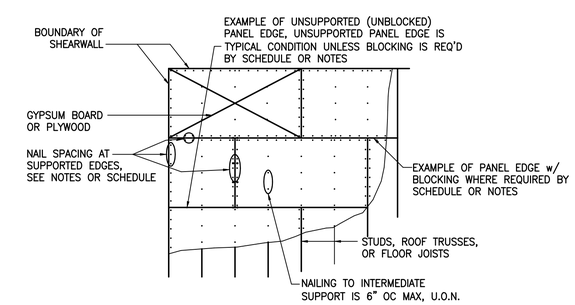

NAILING PATTERN FOR SHEATHING ON ROOF, FLOOR, AND SHEARWALLS

NAIL PATTERN DETAIL

SCALE: 1/2"=1'-0"

A3

Michael Baker INTERNATIONAL
12740 GRAN BAY PARKWAY WEST
SUITE 2110, JACKSONVILLE, FLORIDA 32258
(904) 380-2500
CORPORATE LICENSE NUMBER 00004307

Designer: CJR	Checked by: AT
Technician: CJR	Baker Project No: 175439

Keynote/Notes:

BID DOCUMENTS

REVISIONS

No.	Description	Date	By

Project Name: CITY OF KEYSTONE HEIGHTS TRAIL HEAD

Drawing Name: Sections & Details

BAKER Design Build
219 N. Newnan Street, 2nd Floor, Jacksonville FL 32202
p 904 356 8520 f 904 559 2678 bakerdesign.build
C.A. No. 32489

ENGINEER OF RECORD: FAUSTO D. URIGUEN, P.E. FL LICENSE NO. 80630

Date: MARCH 2020

Scale: AS SHOWN

Drawing Number: S2.2

Plotted on: 1/17/2020 2:04 PM By:Rick White
Located: P:\Engineering\PROJECTS\MICHAEL BAKER\19-0500 KEYSTONE HEIGHTS TRAIL HEAD\6-Structural\0-BDB Drawings\S2.1 DETAILS 19-0500.dwg

LEGEND

- SOIL & WASTE PIPING (S)
- VENT PIPING (V)
- COLD WATER PIPING (CW)
- HOT WATER PIPING (HW)
- HOT WATER RECIRCULATING PIPING (HWR)
- BALL VALVE (BV)
- BALL VALVE IN VERTICAL RUN (BV)
- UNION (UN)
- CAP ON END OF PIPE
- PLUGGED TEE
- WATER HAMMER ARRESTOR– LETTER INDICATES P.D.I. RATING
- PLUG FOR FUTURE CONNECTION
- PIPE TURNING DOWN
- PIPE TURNING UP
- DROP OR RISE
- BRANCH CONNECTION FROM BOTTOM
- BRANCH CONNECTION FROM TOP
- BRANCH CONNECTION FROM SIDE
- UF — UNDER FLOOR
- OH — OVER HEAD
- DN — DOWN
- FCO — FLOOR CLEANOUT
- WCO — WALL CLEANOUT
- PUMP
- ISOLATION BALL VALVE
- CHECK VALVE
- HOSE BIBB (HB)
- CONNECT TO EXISTING
- O.A.E. — OR APPROVED EQUAL

PLUMBING FIXTURE SCHEDULE

MARK	FIXTURE	PIPE SIZE–INCH.				NOTES
		CW	HW	SAN.	VENT	
F–1	WATER CLOSET, ADA COMPLIANT	1"	––	3"	1–1/2"	FLOOR MOUNTED
F–2	LAVATORY, ADA COMPLIANT	1/2"	––	1–1/2"	1–1/4"	WALL MOUNTED
F–3	SERVICE SINK	1/2"	––	2"	1–1/4"	FLOOR MOUNTED
F–4	HI/LO WATER COOLER	1/2"	––	1–1/2"	1–1/4"	
GCO–1	GROUND CLEANOUT	––	––	3"	––	
WCO–1	WALL CLEANOUT	––	––	2"	––	

SECTION 15400 PLUMBING

PART 1. GENERAL

1.01 GENERAL

A. THE CONTRACTOR SHALL VISIT THE SITE PRIOR TO BIDDING. ALL MATERIALS, INCLUDING OSHA REQUIREMENTS, MUST BE INCLUDED IN HIS PRICE.

B. ALL WORK SHALL BE IN ACCORDANCE TO THE FLORIDA PLUMBING CODE AND AUTHORITIES HAVING JURISDICTION.

1.02 DRAWINGS

A. PLUMBING DRAWINGS ARE DIAGRAMMATIC AND LOCATIONS OF PIPING AND/OR EQUIPMENT MUST BE LOCATED IN THE FIELD. DRAWINGS ARE NOT TO BE SCALED. SEE ARCHITECTURAL PLANS FOR FIXTURE LOCATIONS OR BUILDING SIZES.

B. ALL LABOR, MATERIAL, EQUIPMENT AND SERVICE NECESSARY FOR AND REASONABLY INCIDENTAL TO THE PROPER COMPLETION OF ALL WORK FOR PLUMBING, AND OTHER SYSTEMS AS SHOWN ON DRAWINGS AND SPECIFIES HEREIN SHALL BE PROVIDED COMPLETE IN OPERATIVE CONDITION TO THE APPROVAL OF THE ARCHITECT AND LANDLORD.

1.03 CODES, PERMITS AND REGULATIONS

A. CONTRACTOR IS RESPONSIBLE FOR COMPLYING WITH ALL LOCAL, STATE AND FEDERAL CODES EVEN IF IT MEANS SUPPLYING, OR INSTALLING DIFFERENT OR ADDITIONAL EQUIPMENT AND MATERIALS, OTHER THAN THOSE SPECIFIED IN SPECIFICATIONS OR DRAWINGS. HE IS ALSO RESPONSIBLE FOR OBTAINING AND PAYING FOR ALL PERMITS AND FEES RELATED TO THIS SECTION.

B. ANY NEGOTIATIONS BETWEEN OWNER'S REPRESENTATIVE AND CITY, STATE, AND FEDERAL OR PRIVATE UTILITIES OVER PERMITS OR FEES IS ALSO THE RESPONSIBILITY OF THE CONTRACTOR.

1.04 SUBMITTALS

A. SUBMIT MANUFACTURERS PRODUCT DATA FOR EACH PLUMBING ITEM AND MATERIAL USED ON PROJECT.

1.05 INSTALLATION

A. WHERE DRAIN AND WATER CONNECTIONS THAT ARE NECESSARY TO THE OPERATION OF FIXTURE OR EQUIPMENT ARE NOT SPECIFICALLY INDICATED, EXTEND NECESSARY BRANCHES TO THE CLOSEST INDICATED BRANCH OR MAIN.

B. DO NOT ALLOW DISSIMILAR METALS TO COME IN CONTACT WITH EACH OTHER.

C. IT IS THE RESPONSIBILITY OF THE CONTRACTOR TO COORDINATE THE LOCATION OF ALL PLUMBING FIXTURES, PIPING AND EQUIPMENT WITH THE LOCATIONS OF FLOOR OPENINGS, WALLS AND EQUIPMENT, (LIGHTS, A/C DUCTS, ETC.) AND INSTALL PIPING SO AS NOT TO CONFLICT. IT IS ALSO THE CONTRACTOR'S RESPONSIBILITY TO NOTIFY THE ARCHITECT/ENGINEER OF ANY CONFLICTS THAT REQUIRE ANY CHANGES OR DEVIATIONS FROM THE DOCUMENTS BEFORE ANY PIPING OR EQUIPMENT IS INSTALLED.

PART 2 MATERIALS

2.01. MISCELLANEOUS

A. ESCUTCHEONS: ESCUTCHEONS SHALL BE PROVIDED FOR ALL PIPING THROUGH WALLS, FLOORS AND CEILING WHERE PIPING IS EXPOSED TO VIEW IN FINISHED AREAS. ESCUTCHEONS SHALL BE CHROMIUM PLATED, TWO PIECE, HINGED WITH SET SCREW. ESCUTCHEONS MUST BE RATED FOR COPPER PIPING WHERE REQUIRED.

B. UNIONS: UNIONS SHALL BE GROUND JOINT BRASS UNIONS OR FLANGES; PROVIDE ON EACH PIPING CONNECTION TO EQUIPMENT.

C. DIELECTRIC UNIONS MUST BE USED BETWEEN COPPER AND STEEL PIPING, COPPER AND STEEL OR CAST IRON EQUIPMENT OR OTHER DISSIMILAR METALS. UNIONS SHALL BE EPCO.

D. CLEANOUTS; CLEANOUTS ON PVC PIPE SHALL BE STANDARD PVC FITTINGS WITH FLUSH BRASS PLUGS. INTERIOR WALL CLEANOUTS SHALL HAVE POLISHED CHROME COVER PLATE.

2.02 PLUMBING VALVES

A. DESCRIPTION: ALL SHUT–OFF VALVES 2" AND SMALLER ABOVE GRADE SHALL BE FULL PORT STAINLESS STEEL BALL VALVES WITH BRONZE BODY. VALVES 2 1/2 INCH AND LARGER SHALL BE BUTTERFLY TYPE WITH DRILLED LUG WAFER, LEVER WITH MEMORY STOP, BRONZE DISC, STAINLESS STEEL STEM, AND BUNA N SLEEVE VALVES SHALL BE IN ACCORDANCE WITH FEDERAL SPECIFICATION WW–V–1967.

B.. VALVES:
1. 2–1/2–INCH AND LARGER:
   A. LUG TYPE: STOCKHAM VALVE FIGURE LD–211, OR APPROVED EQUAL.
2. 2–INCH AND SMALLER:
   A. SCREWED: WATTS VALVE B–6800, OR APPROVED EQUAL.
   B. SOLDER JOINT: WATTS VALVE B–6801 OR APPROVED EQUAL.

2.03 TESTING OF PLUMBING PIPING:

A. CONDUCT ALL TESTS AFTER PIPING IS INSTALLED AND BEFORE PIPING IS CONCEALED OR COVERED.

B. SYSTEMS SHALL REMAIN UNDER TEST OF 150 PSIG FOR DOMESTIC WATER AND 10 FEET OF HEAD FOR SANITARY FOR A SUFFICIENT LENGTH OF TIME TO PROVIDE TIGHTNESS AND FOR APPROVAL OF PLUMBING INSPECTOR.

C. TESTING REQUIREMENTS ARE MINIMUM AND ARE NOT INTENDED TO BE LIMITING WHERE ADDITIONAL TESTING METHODS ARE BY THE AUTHORITY HAVING JURISDICTION.

D. STERILIZATION: PROVIDE A DATED LETTER TO THE ARCHITECT– ENGINEER'S REPRESENTATIVE STATING THAT PIPING SYSTEM HAS BEEN STERILIZED AND FLUSHED PER CODE.

2.04 DOMESTIC HOT AND COLD WATER:

A. GENERAL: NO PRODUCT OTHER THAN THE PRODUCT SPECIFIED IN THIS SECTION FOR DOMESTIC HOT AND COLD WATER SHALL BE INSTALLED OR BID FOR THIS SYSTEM WITHOUT PREVIOUS PERMISSION FROM THE ARCHITECT (EXCEPT, IF MATERIAL HAS TO BE CHANGED TO MEET CODE).

B. PIPING: COLD WATER AND HOT WATER PIPING INSIDE BUILDING (ABOVEGROUND AND UNDERGROUND) SHALL BE CPVC SCHEDULE 40.

C. JOINT: 1. SOLVENT WELD CPVC.

D. INSULATION: HOT AND HOT CIRCULATING WATER, HANDICAPPED LAVATORY COLD & HOT WATER STOPS, AND P–TRAPS SHALL BE INSULATED WITH 1 INCH THICK CLOSED CELL ELASTOMERIC INSULATION WITH A 25 FIRE / 50 SMOKE RATING AS RATED BY UL. ALL COLD WATER PIPING EXPOSED TO FREEZING TEMPERATURES SHALL ALSO BE INSULATED WITH INSULATION AS DESCRIBED ABOVE.

2.05 SANITARY VENT AND WASTE PIPING:

A. GENERAL: NO PRODUCT OTHER THAN THE PRODUCT SPECIFIED IN THIS SECTION FOR SANITARY DRAINAGE SHALL BE INSTALLED OR BID FOR THIS SYSTEM WITHOUT PRIOR PERMISSION FROM THE ARCHITECT, (EXCEPT IF MATERIAL HAS TO BE CHANGED TO MEET CODE).

B. PRODUCTS: SANITARY VENT AND WASTE PIPING, 6 INCHES AND SMALLER, UNLESS OTHERWISE NOTED ON DRAWINGS, SHALL BE PVC SCHEDULE 40 DWV.

C. JOINT:
1. PVC: SOLVENT WELD.

2.06 FIXTURES:

A. AS SPECIFIED ON DRAWINGS OR IN THIS SPECIFICATION. ALL FIXTURES SHALL BE PROVIDED AND INSTALLED BY THE CONTRACTOR.

PART 3 EXECUTION

3.01. GENERAL

A. INSTALL ALL EQUIPMENT IN ACCORDANCE TO MANUFACTURERS RECOMMENDATIONS AND/OR INSTALLATION INSTRUCTIONS.

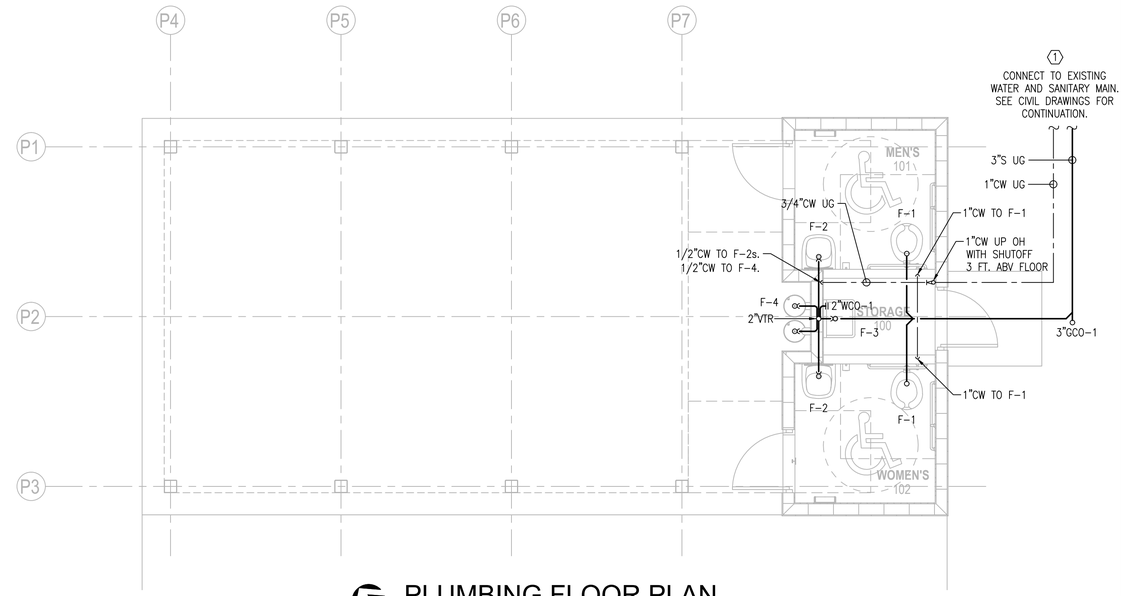

NORTH

PLUMBING FLOOR PLAN

SCALE: 1/4" = 1'–0"

KEYED NOTES:

1. FIELD VERIFY FOR AN EXISTING BACKFLOW PREVENTER. INSTALL NEW BACKFLOW PREVENTER IF THERE IS NOT AN EXISTING BACKFLOW PREVENTER.

PLUMBING FIXTURE SPECIFICATIONS

F–1 WATER CLOSET: ADA COMPLIANT. FLOOR MOUNTED, SIPHON JET, 1.6 GPF WATER SAVER, 1–1/2" TOP SPUD, ANTIMICROBIAL, WHITE VITREOUS CHINA WITH ELONGATED BOWL, PLASTIC OPEN FRONT SEAT, MANUAL FLUSH VALVE WITH VACUUM BREAKER, AND BOLT CAPS. AMERICAN STANDARD MADERA FLOWISE 16.5" HEIGHT #3461.001 (O.A.E.). FLUSH VALVE SLOAN REGAL 111–XL (O.A.E.).

F–2 LAVATORY: ADA COMPLAINT, WALL HUNG, WHITE, VITREOUS CHINA, 4 INCH CENTERS, FRONT OVERFLOW, AND WALL CARRIER. AMERICAN STANDARD LUCERNE #0355.012 (O.A.E.).

TRIM: POLISHED CHROME, 4 INCH FIXED CENTERS, POLISHED CHROME STRAINER, 0.5 GPM VANDAL PROOF NON–AERATING SPRAY, POLISHED CHROME PLATED P–TRAP WITH WASTE ARM AND ESCUTCHEON, 1/2 INCH ANGLE SUPPLIES WITH STOPS AND ESCUTCHEON. CHICAGO FAUCETS #3400–ABCP (O.A.E.). INSTALL 1" THICK WHITE ARMAFLEX INSULATION AROUND P–TRAP, STOPS AND SUPPLY LINES.

F–3 SERVICE SINK: 24x24x12, ONE–PIECE, PRE–CAST TERAZZO, FLOOR MOUNTED, CORNER STYLE, 3" DRAIN & STRAINER. FIAT #TSB3000 (O.A.E.).

TRIM: ROUGH–PLATED CAST BRASS, THREADED SPOUT WITH VACUUM BREAKER HOSE & HOSE BRACKET, PAIL HOOK, 3/4" ANGLE SUPPLIES WITH STOPS AND ESCUTCHEONS. MODEL 830AA, 832AA, 833AA, 1239BB, AND MSG. FIAT OR APPROVED EQUAL.

F–4 HI/LO WATER COOLER: ADA APPROVED WHEELCHAIR ACCESSIBLE, LEAD FREE CONSTRUCTION, FRONT/SIDE PUSHBAR OPERATION, STAINLESS STEEL TOP, WELDED HEAVY DUTY STEEL CABINET WITH SANDSTONE FINISH, STEEL WALL BRACKET, 8.0 GPH OF 50°F WATER @ 90°F AMBIENT AIR TEMP. AND 80°F WATER INLET. 4.0 FULL LOAD AMPS @ 115 VOLTS 60 HZ ELKAY MODEL EZSTL8LC (O.A.E).

GCO–1 GROUND CLEANOUT. HUB TYPE, NON ADJUSTABLE DURA COATED CAST IRON BODY, HEAVY DUTY TOP, ZURN Z–1402 OR APPROVED EQUAL. POUR A 12" X 12" X 6" DEEP CONCRETE PAD AROUND CLEAN OUT. TOP TO BE FLUSH WITH CONCRETE AND FINISHED GRADE.

WCO–1 WALL CLEANOUT. ZURN Z1468 WITH ROUND ACCESS COVER (O.A.E.).

GENERAL NOTES:

1. REFER TO ARCHITECTURAL FOR ADDITIONAL INFORMATION. IF THERE IS A CONFLICT ARCHITECTURAL DRAWINGS SHALL TAKE PRECEDENCE.
2. PIPE ROUTING IS DIAGRAMMATIC. CHANGES TO ROUTING SHALL BE SHOWN ON RECORD DRAWINGS.

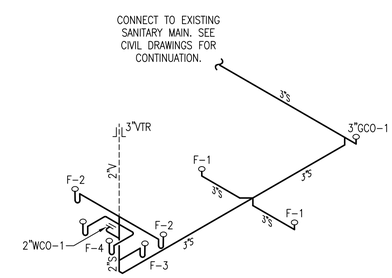

SANITARY RISER DIAGRAM

NOT TO SCALE

8290 Bayberry Road, Jacksonville, Florida 32256-7414
Tel: 904.731.9393 Fax: 904.731.9399
www.engineeringinnovations.com
MECHANICAL ELECTRICAL FIRE PROTECTION INFRARED FORENSIC
Eng Engineering Inc.

CITY OF KEYSTONE HEIGHTS
"IN GOD WE TRUST"
SINCE 1925

Michael Baker INTERNATIONAL
12740 GRAN BAY PARKWAY WEST
SUITE 2110, JACKSONVILLE, FLORIDA 32258
(904) 380-2500
CORPORATE LICENSE NUMBER 00004307

Designer: EE	Checked by: EE
Technician: EE	Baker Project No: 175439

Seal:

Keymap/Notes:

REVISIONS

No.	Description	Date	By

Project Name:

CITY OF KEYSTONE HEIGHTS TRAIL HEAD

Drawing Name:

PLUMBING FLOOR PLAN

BID DOCUMENTS

ENGINEER OF RECORD

Date: MARCH 2020	Drawing Number: P-100
Scale: AS SHOWN	

Plotted on: 1/22/2020 11:23 AM By:Eric Eng
Located: F:\Acadfiles\2019\2019-041 Keystone Heights Trail Head\Construction Drawings\Plumbing\P-100.dwg

LEGEND

- INSULATED FLEXIBLE DUCT, R-6.0
- DUCT DOWN
- DUCT UP
- VOLUME DAMPER
- SUPPLY DIFFUSER
- RETURN GRILLE
- EXHAUST FAN
- CONNECT TO EXISTING
- THERMOSTAT

SECTION 15000 MECHANICAL GENERAL PROVISIONS

PART 1.-GENERAL

1.01. DRAWINGS AND SPECIFICATIONS:

A. THE DRAWINGS AND SPECIFICATIONS ARE TO BE CONSIDERED AS A WHOLE. ALL LABOR, MATERIAL, EQUIPMENT AND SERVICE NECESSARY FOR AND REASONABLY INCIDENTAL TO THE PROPER COMPLETION OF ALL WORK FOR THE PLUMBING, HEATING, AIR CONDITIONING AND VENTILATION AND OTHER SYSTEMS AS SHOWN ON DRAWINGS AND SPECIFIES HEREIN SHALL BE PROVIDED COMPLETE IN OPERATIVE CONDITION TO THE APPROVAL OF THE ENGINEER AND LANDLORD.

1.02. CODES AND REGULATIONS:

A. ALL WORK PERFORMED UNDER THIS SECTION SHALL CONFORM WITH ALL LOCAL GOVERNING REGULATIONS, AND IS CASE OF CONFLICTING REQUIREMENTS, THE MOST STRINGENT SHALL APPLY. MINIMUM REQUIREMENTS SHALL BE THE FLORIDA PLUMBING AND MECHANICAL CODE AS PUBLISHED BY THE FLORIDA BUILDING CODE ALL ELECTRICALLY OPERATED EQUIPMENT SPECIFIED IN THIS SECTION SHALL COMPLY WITH THE NATIONAL ELECTRIC CODE AND NATIONAL FIRE PROTECTION ASSOCIATION. FEES AND PERMITS:

B. THE CONTRACTOR SHALL OBTAIN AND PAY FOR ALL PERMITS, FEES FOR INSPECTIONS, AND CHARGES OF EVERY KIND THAT MAY BE NECESSARY FOR FULLY COMPLETING THE WORK. THE CONTRACTOR SHALL MAKE ALL NECESSARY TESTS REQUIRED BY THE CITY, COUNTY, OR STATE AUTHORITIES, LEGAL REGULATIONS, AND/OR THE ARCHITECT, AND RETURN TO THE WORK, ETC., SIGNED BY THE INSPECTOR IN CHARGE OF EACH PARTICULAR AREA OF WORK.

1.03. RESPONSIBILITY OF CONTRACTOR:

A. THIS CONTRACTOR SHALL BE FULLY RESPONSIBLE FOR THE SAFETY AND GOOD CONDITION OF ALL WORK AND MATERIALS CONNECTED WITH HIS CONTRACT UNTIL SAME IS ACCEPTED OR OPERATED BY OWNER. HE SHALL USE PROPER PRECAUTION TO PROTECT HIS OWN WORK AND THAT OF OTHERS FROM DAMAGE AND SHALL MAKE GOOD WITHOUT EXPENSE TO THE OWNER ANY DAMAGE CAUSED BY HIMSELF OR HIS EMPLOYEES TO PERSON OR PROPERTY. HE SHALL COOPERATE WITH OTHER CONTRACTORS AND COORDINATE HIS WORK WITH OTHERS.

B. THE CONTRACTOR SHALL VISIT THE SITE OF THE PROPOSED WORK AND FULLY ACQUAINT HIMSELF WITH CONDITIONS ABOUT THE CONSTRUCTION AND LABOR SO HE MAY FULLY UNDERSTAND THE FACILITIES, DIFFICULTIES AND RESTRICTIONS ATTENDING THE EXECUTION OF THE WORK UNDER THIS CONTRACT. THE FAILURE OF OMISSION OF ANY BIDDER TO RECEIVE OR EXAMINE ANY FORM, INSTRUMENT, ADDENDUM OF OTHER DOCUMENT SHALL IN NO WAY RELIEVE THE ANY BIDDER FROM ANY OBLIGATION WITH RESPECT TO HIS BID OR THE CONTRACT. THE SUBMISSION OF A BID SHALL BE TAKEN AS PRIMA FACIA EVIDENCE OF COMPLIANCE WITH THIS PARAGRAPH AND THAT HE HAS INCLUDED IN HIS PROPOSAL EVERY ITEM OF COST NECESSARY FOR A COMPLETE INSTALLATION OF PLUMBING, HEATING, VENTILATION, AND AIR CONDITIONING OPERATIONS STRICTLY AS PLANNED AND SPECIFIED.

1.04. VERIFICATION OF CONTRACT DRAWINGS:

A. ANY MATERIALS, EQUIPMENT, OR SYSTEMS RELATED TO THIS SECTION AND EXHIBITED ON THE PLUMBING AND HVAC DRAWINGS BUT NOT MENTIONED IN THE SPECIFICATIONS ARE TO BE EXECUTED TO THE INTENT AND MEANING THEREOF, AS IF IT WAS BOTH MENTIONED IN THE SPECIFICATIONS AND STATED ON THE DRAWINGS. WHERE THE CONTRACTOR FINDS THE SPECIFICATIONS AND/OR DRAWINGS TO CONFLICT OR UNCLEAR, THE DISCREPANCIES SHALL BE BROUGHT TO THE ARCHITECT BEFORE SUBMITTING A BID.

B. THE PLANS INDICATE THE GENERAL ARRANGEMENT OF THE EQUIPMENT. THE LOCATIONS OF PIPING AND DUCTWORK ARE APPROXIMATE FOR CLARITY. EXACT LOCATIONS SHALL BE DETERMINED IN THE FIELD BY THE CONTRACTOR. THE CONTRACTOR SHALL VERIFY EXACT SIZE AND LOCATION OF EXISTING UTILITIES WHERE NEW CONNECTIONS MUST BE MADE. IF IT SHOULD BECOME NECESSARY TO CHANGE THE LOCATIONS OF ANY WORK DUE TO BUILDING CONSTRUCTION, ETC., THE CONTRACTOR SHALL SECURE WRITTEN APPROVAL FROM THE ARCHITECT AND/OR ENGINEER BEFORE MAKING THE CHANGES. UNDER NO CIRCUMSTANCES SHALL THE SIZES INDICATED ON THE DRAWINGS BE CHANGED WITHOUT SECURING WRITTEN APPROVAL FROM THE ARCHITECT AND/OR ENGINEER.

C. THE DRAWINGS ARE DIAGRAMMATIC AND DO NOT SHOW OR INDICATE ALL FITTINGS, OFFSETS, AND ACCESSORIES THAT MAY BE REQUIRED. THE CONTRACTOR SHALL CAREFULLY INVESTIGATE THE STRUCTURAL AND FINISH CONDITIONS AFFECTING ALL HIS WORK AS WELL AS THE OPERATIONAL REQUIREMENTS OF EACH SYSTEM, AND SHALL ARRANGE SUCH WORK ACCORDINGLY, FURNISHING SUCH FITTINGS, ETC., AS MAY BE REQUIRED FOR THE PROPER AND EFFICIENT FUNCTIONING OF EACH SYSTEM. UNNECESSARY OR UNAUTHORIZED OFFSETS WILL NOT BE PERMITTED.

1.05. WORKMANSHIP:

A. ALL WORK SHALL BE PERFORMED IN A WORKMANLIKE MANNER AND SHALL BE IN GOOD USABLE CONDITION WHEN COMPLETED. IT IS A REQUIREMENT THAT THE CONTRACTOR PERFORMING SUCH WORK TO GUARANTEE THE WORK TO BE FREE FROM ANY AND ALL DEFECTS IN WORKMANSHIP AND MATERIALS FOR ONE (1) YEAR FROM OWNER'S ACCEPTANCE. CONTRACTOR SHALL BE RESPONSIBLE FOR THE REPLACEMENT OR REPAIR, WITHOUT ADDITIONAL CHARGE, OF ANY AND ALL WORK DONE OR FURNISHED BY OR THROUGH SUCH PERSON THAT SHALL BECOME DEFECTIVE WITHIN ONE (1) YEAR FROM OWNER'S ACCEPTANCE. THE CORRECTION OF SUCH WORK SHALL INCLUDE, WITHOUT ADDITIONAL CHANGE, ALL EXPENSES AND DAMAGES IN CONNECTION WITH SUCH REMOVAL, REPLACEMENT, OR REPAIR OF ANY PART OF THE WORK THAT MAY BE DAMAGED OR DISTURBED THEREBY. ALL WARRANTIES OR GUARANTEES AS TO MATERIALS OR WORKMANSHIP ON OR WITH RESPECT TO THE WORK SHALL BE CONTAINED IN THIS CONTRACT.

1.06. SUBMITTAL DATA:

A. MATERIALS AND EQUIPMENT PROPOSED FOR INSTALLATION SHALL BE SUBMITTED 20 WORKING DAYS BEFORE PURCHASING AND INSTALLATION TO THE ARCHITECT FOR APPROVAL. INCLUDE CATALOGS, CUTS, MAINTENANCE DATA, DIAGRAMS, DRAWINGS, SPECIFICATIONS, AND SUCH OTHER DESCRIPTIVE DATA AS MAY BE REQUIRED BY THE ARCHITECT AND/OR ENGINEER. ALL EQUIPMENT SPECIFIED AND/OR SCHEDULED ON DRAWINGS, INCLUDING MATERIALS AND EQUIPMENT IN THIS DOCUMENT, MUST BE SUBMITTED. ALL MATERIALS REQUIRED TO BE SUBMITTED FOR APPROVAL UNDER THIS SECTION SHALL BE SUBMITTED AT ONE TIME. PARTIAL SUBMITTALS WILL BE RETURNED.

B. WHERE EQUIPMENT NAMED AS EQUIVALENT, OR APPROVED EQUAL, ARE PROPOSED FOR USE BY THE CONTRACTOR, HE SHALL BE RESPONSIBLE TO COORDINATE ANY CHANGES WITH ALL TRADES AFFECTED AND BEAR ALL COST OF SUCH CHANGES.

C. WHERE THE EQUIPMENT FURNISHED DIFFERS FROM THAT INDICATED IN THE CONTRACT DRAWINGS OR WHERE THE CONTRACTOR CONSIDERS ADDITIONAL DETAIL OR SHOP DRAWINGS ESSENTIAL TO PROPERLY FABRICATE AND INSTALL THESE EQUIPMENT, HE SHALL PREPARE SUCH DRAWINGS AND SUBMIT FOR REVIEW.

1.07. PENETRATIONS:

A. ALL PENETRATIONS SHALL BE IN ACCORDANCE TO A RECOGNIZED AUTHORITY, SUCH AS HILTI INC., ETC. AND IN ACCORDANCE TO THE LOCAL CODES AND AUTHORITIES HAVING JURISDICTION. ALL CUTTING AND PATCHING OF BUILDING MATERIALS REQUIRED FOR THE INSTALLATION OF THE PLUMBING AND HVAC WORK SHALL BE DONE IN THIS SECTION. NO STRUCTURAL MEMBERS SHALL BE CUT WITHOUT WRITTEN APPROVAL FROM THE ARCHITECT. ALL PATCHING SHALL BE DONE IN A NEAT WORKMANLIKE MANNER TO MATCH ADJACENT SURFACES.

1.08. SUPERVISION AND INSPECTION:

A. THE CONTRACTOR MUST AT ALL TIMES DURING THE WORKING HOURS ASSIST THE ARCHITECT OR HIS REPRESENTATIVES IN THE INSPECTION OF HIS WORK AND WILL PROVIDE FACILITIES AS ARE NECESSARY FOR THE SAFETY OF THOSE MAKING THE INSPECTION.

B. THE CONTRACTOR WILL KEEP ON THE JOB UNTIL COMPLETION A COMPETENT FOREMAN VESTED WITH AUTHORITY TO ACT IN THE CAPACITY OF THE CONTRACTOR IN HIS ABSENCE. TRANSACTIONS WITH SAID FOREMAN ARE AS BINDING AS THOSE WITH THE CONTRACTOR.

1.09. QUALITY OF MATERIALS AND EQUIPMENT:

A. MATERIALS SPECIFICALLY MENTIONED IN THESE PLANS AND SPECIFICATIONS SHALL BE CONSIDERED A STANDARD OF QUALITY AND SHALL NOT BE CONSIDERED RESTRICTIVE. IT IS NOT THE INTENT OF THESE SPECIFICATIONS TO LIMIT MATERIAL AND/OR EQUIPMENT SELECTIONS TO ONE MANUFACTURER; HOWEVER, THE ENGINEER RESERVES THE RIGHT TO BE THE FINAL AND SOLE JUDGE WITH REGARD TO EQUALS.

B. APPROVAL OF EQUIPMENT IS BASED ON CAPACITIES, QUALITY OF WORKMANSHIP AND COMPONENTS, OR GENERAL AND SPECIAL CONSTRUCTION FEATURES. APPROVAL OF EQUIPMENT DOES NOT RELIEVE THE CONTRACTOR OF COORDINATION RESPONSIBILITY WITH OTHER TRADES. EQUIPMENT SHALL FIT WITHIN THE PHYSICAL SPACE OF EQUIPMENT SHOWN AND HAVE THE SAME GENERAL CONNECTIONS AS THAT SHOWN ON DRAWINGS. PROPER CLEARANCES SHALL BE MAINTAINED FOR SERVICING AND MAINTAINING EQUIPMENT.

C. WHERE EQUIPMENT SUBMITTED VARIES FROM THE GENERAL ARRANGEMENT OF THAT SPECIFIED, THE CONTRACTOR SHALL SUBMIT DETAILED SHEET METAL AND PIPING SHOP DRAWINGS ALONG WITH EQUIPMENT BROCHURES. SHOP DRAWINGS SHALL SHOW ANY AND ALL PIPING, SHEET METAL, ELECTRICAL, AND STRUCTURAL CHANGES REQUIRED TO FACILITATE CHANGE AND ANY OR ALL ADDITIONAL COSTS INCURRED BY CHANGES WILL BE BORNE BY THE CONTRACTOR.

1.10. START-UP AND SERVICE:

A. THE CONTRACTOR SHALL PUT ALL ITEMS INSTALLED UNDER THIS SECTION INTO OPERATION AND SHALL INSTRUCT THE OWNER IN ALL POINTS REQUIRING SERVICE AND MAINTENANCE. THE CONTRACTOR SHALL ADJUST AND/OR SERVICE REQUIREMENTS TO SAID EQUIPMENT DURING THE FIRST 60 DAYS FOLLOWING OWNER ACCEPTANCE.

1.11. GUARANTEE:

A. ALL MATERIALS PROVIDED AND/OR INSTALLED UNDER THIS SECTION OF THE SPECIFICATIONS SHALL BE GUARANTEED FOR ONE YEAR FROM THE DATE OF ACCEPTANCE OF THE WORK BY THE OWNER. SHOULD ANY TROUBLE DEVELOP DURING THIS PERIOD DUE TO DEFECTIVE MATERIALS OR FAULTY WORKMANSHIP, THE CONTRACTOR SHALL FURNISH ALL NECESSARY MATERIALS TO CORRECT THE TROUBLE WITHOUT ANY COST TO THE OWNER. ANY DEFECTIVE MATERIALS OR INFERIOR WORKMANSHIP NOTICED AT TIME OF INSTALLATION AND/OR DURING THE GUARANTEE PERIOD SHALL BE CORRECTED IMMEDIATELY TO THE ENTIRE SATISFACTION OF THE OWNER.

1.12. MAINTENANCE DATA:

A. OPERATION, MAINTENANCE, SPARE PARTS BOOKLETS SHALL BE PROVIDED FOR ALL ITEMS OF EQUIPMENT REQUIRING MAINTENANCE. SUBMIT BOOKLETS IN A COVERED BINDER.

1.13. TEST AND BALANCE:

A. CONTRACTOR SHALL CONDUCT A TEST AND BALANCE OF THE ENTIRE HVAC SYSTEM IN ACCORDANCE TO THE FLORIDA MODEL ENERGY CODE. T&B CONTRACTOR TO BE NEBB CERTIFIED. SUBMIT 5 COPIES OF REPORT AFTER TESTING AND BALANCE FOR APPROVAL BY ENGINEER. T&B REPORT MUST BE COMPLETED AND APPROVED PRIOR TO MECHANICAL FINAL INSPECTION.

PART 2. MATERIALS

A. EXHAUST DUCTWORK AND PLENUMS SHALL BE SHEET METAL AND IN ACCORDANCE TO SMACNA.

PART 3. EXECUTION

A. INSTALL ALL EQUIPMENT IN ACCORDANCE TO MANUFACTURERS RECOMMENDATIONS AND/OR INSTALLATION INSTRUCTIONS.

B. ALL MECHANICAL ITEMS ARE IN WORKING CONDITION. ANY DAMAGE OR IN OPERATION OF EQUIPMENT CASED BY RELOCATION MUST BE REPLACED WITH EXACT DUPLICATE WITH NO COST TO OWNER. REPAIR OF EQUIPMENT IS NOT ACCEPTED.

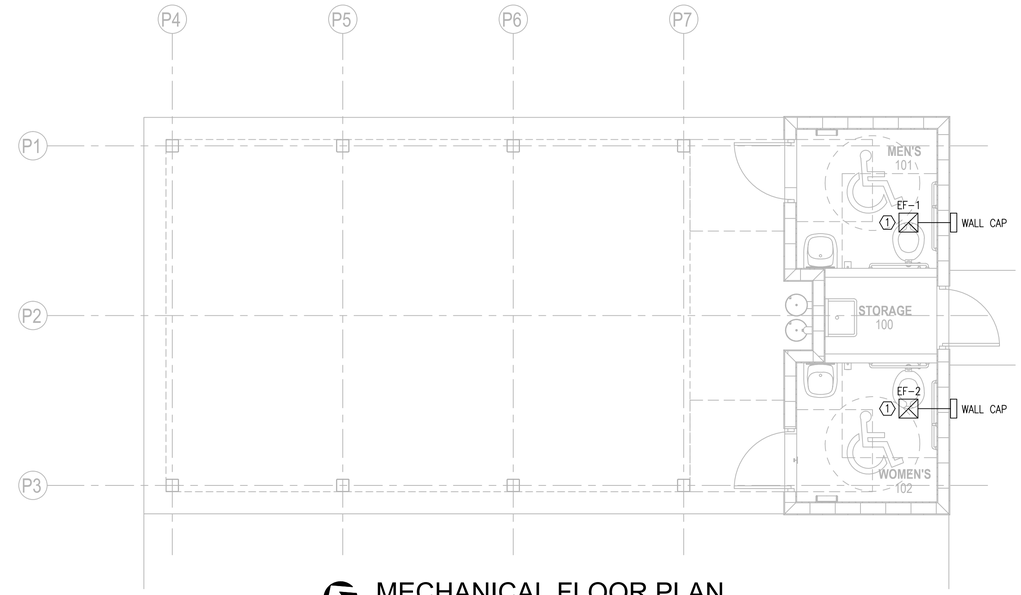

NORTH

MECHANICAL FLOOR PLAN

SCALE: 1/4" = 1'-0"

KEYED NOTES:

1. TIE EXHAUST FAN TO LIGHTING CONTROL.

FAN SCHEDULE

MARK	SERVICE	TYPE	AIR FLOW (CFM)	EXT. SP (IN WG)	HP	VOLTS/PH	MANUFACTURER	MODEL NUMBER	NOTES
EF-1	TOILET	CEILING	50	0.375	1/8	120/1	COOK	GC146	1,2,3
EF-2	TOILET	CEILING	50	0.375	1/8	120/1	COOK	GC146	1,2,3

NOTES:
1. BACKDRAFT DAMPER.
2. OR APPROVED EQUAL.
3. INTERLOCK WITH LIGHTS.

Eng Engineering Inc.
8291 Bayberry Road, Jacksonville, Florida 32256-7414
Tel: 904.731.2323 Fax: 904.731.2329
www.engineeringinc.com
MECHANICAL ELECTRICAL FIRE PROTECTION INFRARED FORENSIC

CITY OF KEYSTONE HEIGHTS
"IN GOD WE TRUST"
SINCE 1925

Michael Baker INTERNATIONAL
12740 GRAN BAY PARKWAY WEST
SUITE 2110, JACKSONVILLE, FLORIDA 32258
(904) 380-2500
CORPORATE LICENSE NUMBER 00004307

Designer: EE	Checked by: EE
Technician: EE	Baker Project No: 175439

Seal:

Keymap/Notes:

REVISIONS

No.	Description	Date	By

Project Name:

CITY OF KEYSTONE HEIGHTS TRAIL HEAD

Drawing Name:

MECHANICAL FLOOR PLAN

BID DOCUMENTS

ENGINEER OF RECORD

Date: MARCH 2020	Drawing Number: M-100
Scale: AS SHOWN	

ELECTRICAL LEGEND

C	CONDUIT
UG	UNDERGROUND
WP	WEATHER PROOF
⬡ ○ ⬭	KEYED NOTE
$a	SINGLE POLE SWITCH. MOUNT 46" AFF UON. SMALL LETTER INDICATES DEVICE SWITCHED.
$3	THREE-WAY POLE SWITCH. MOUNT 46" AFF UON.
$D	DIMMER SWITCH. MOUNT 46" AFF UON.
$WP	SWITCH IN WEATHERPROOF ENCLOSURE. MOUNT 46" AFF UON.
$OS	OCCUPANCY SENSOR SWITCH
	DUPLEX RECEPTACLE OUTLET. MOUNT 18" AFF UON.
GFI	DUPLEX RECEPTACLE OUTLET WITH GROUND FAULT CIRCUIT-INTERRUPTER. MOUNT 18" AFF UON.
	DUPLEX RECEPTACLE OUTLET ABOVE COUNTER. MOUNT 44" A.F.F. UON. SHADED SIDES = GFI.
2	MOTOR CONNECTION. NUMBER INDICATES HORSEPOWER, F=FRACTIONAL HP. ALL MOTORS SHALL BE PROVIDED WITH DISCONNECTING MEANS AND OVERLOAD PROTECTION.
	CIRCUIT BREAKER PANEL BOARD
J	JUNCTION BOX
P	PHOTOCELL LIGHTING CONTROL AND WEATHER BOX

ELECTRICAL SPECIFICATIONS

WORK: THE SPECIFICATIONS COVER ALL THE ELECTRICAL WORK FOR THE PROJECT. WORK SHALL INCLUDE LABOR, MATERIAL AND ACCESSORIES REQUIRED TO ACCOMPLISH THIS WORK AS SPECIFIED AND SHOWN ON THE DRAWINGS.

CODES, PERMITS AND INSPECTIONS: INSTALLATION SHALL COMPLY WITH ALL LAWS APPLYING TO ELECTRICAL INSTALLATION IN EFFECT WITH THE REGULATIONS OF THE NATIONAL ELECTRICAL CODE, NATIONAL ELECTRICAL SAFETY CODE, FLORIDA BUILDING CODE, OTHER APPLICABLE PUBLICATIONS OF THE NATIONAL FIRE PROTECTION ASSOCIATION, ALL LOCAL GOVERNING CODES AND ORDINANCES AND WITH THE REGULATIONS OF THE SERVING UTILITY COMPANY.

CONTRACTOR SHALL COORDINATE HIS WORK WITH ALL OTHER TRADES AND WITH THE OWNER.

PERMITS: CONTRACTOR SHALL OBTAIN AND PAY FOR ALL PERMITS AND PROVIDE A CERTIFICATE OF OCCUPANCY FOR THE FINAL INSPECTION. PROVIDE A COPY OF ALL CERTIFICATES TO THE OWNER.

RECORD DRAWINGS: PROVIDE ONE COMPLETE SET OF CONTRACT DRAWINGS IN CLEAN, UNDAMAGED CONDITION, INDICATING ALL SIGNIFICANT CHANGES FROM THE WORK AS SHOWN AND WHICH PREVIOUSLY IS EITHER NOT SHOWN OR FIELD MODIFIED.

SUBMITTALS: SUBMIT FOR APPROVAL ON ALL ELECTRICAL PRODUCTS INCORPORATED INTO THE PROJECT INCLUDING:
1) CONDUIT AND BOXES
2) WIRE
3) LABELS
4) SAFETY SWITCHES
5) SYSTEMS, CONTROLS, AND EQUIPMENT

PROVIDE EACH MANUFACTURERS PUBLISHED PRODUCT DATA, SHOP DRAWINGS, WRITING DIAGRAMS, SHOWING UL LISTING, IN A SINGLE BINDER WITH TABLE OF CONTENTS AND COVER IDENTIFYING THE PROJECT AND CONTRACTOR. PROVIDE QUANTITY AS REQUIRED.

PERFORMANCE: GENERAL: ALL NECESSARY ADDITIONS AND ALTERATIONS TO EXISTING WORK SHALL BE INCLUDED AS REQUIRED TO PROVIDE AND MAINTAIN A COMPLETE AND PROPER ELECTRICAL INSTALLATION. SITE INSPECTION IS REQUIRED.

THE WORK SHALL INCLUDE, BUT NOT LIMITED TO: 1) PROVIDE ALL EQUIPMENT, CONDUIT, WIRING, CONNECTIONS, AND TESTING FOR A COMPLETE FUNCTIONING SYSTEM. 2) AS-BUILT DRAWINGS ARE REQUIRED.

PRODUCTS

QUALITY ASSURANCE: ALL EQUIPMENT SHALL BE NEW AND SHALL COMPLY WITH STANDARDS OF UNDERWRITER'S LABORATORIES, INC., WHERE STANDARDS HAVE BEEN ESTABLISHED FOR PARTICULAR PRODUCT AND VARIOUS NEMA, ANSI, ASTM, IEEE, AEIC, IPCEA OR OTHER PUBLICATIONS REFERENCED.

CONDUIT: ALL WIRING SHALL BE IN CONDUIT. EMT SHALL BE USED IN THE BUILDING INTERIOR UP TO 4 INCHES IN DIAMETER. GALVANIZED RIGID STEEL SHALL BE USED IN ALL AREAS EXPOSED TO DAMP WEATHER AND BELOW EIGHT FEET ABOVE FINISHED FLOOR. SCHEDULE 40 PVC MAY BE USED IN ALL OTHER UNDERGROUND AREAS, AS ALLOWED BY CODE.

WIRE: WIRE SHALL BE COPPER THHN/THWN, 600V COLOR CODED. 208 VOLT SYSTEM: NEUTRAL-WHITE, PHASE A - BLACK, PHASE B - RED, PHASE C - BLUE, GROUND CONDUCTOR - GREEN. PROVIDE A GROUND IN ALL CONDUITS.

LABELING: ALL PANELS AND EQUIPMENT SHALL BE LABELED WITH LAMINATED PLASTIC LABELS. LABELS SHALL BE WHITE LETTERS ON BLUE BACKGROUND WITH 5/16" HIGH LETTERS.

SAFETY SWITCHES (DISCONNECT SWITCHES) SHALL BE NEMA HEAVY DUTY (HD). FUSED AND UN-FUSED. EXTERIOR TO BE NEMA 3R UNLESS NOTED OTHERWISE.

EXECUTION GENERAL

WORKING CLEARANCES: WORKING CLEARANCES AROUND EQUIPMENT REQUIRING ELECTRICAL SERVICE SHALL COMPLY WITH CODE REQUIREMENTS. SHOULD THERE BE APPARENT VIOLATIONS OF CLEARANCES, NOTIFY THE ARCHITECT-ENGINEER BEFORE PROCEEDING WITH CONNECTION OR PLACEMENT OF EQUIPMENT.

COORDINATION: INSTALLATION STUDIES SHALL BE MADE TO COORDINATE THE ELECTRICAL WORK WITH WORK OF OTHER TRADES. DAMAGE FROM INTERFERENCE CAUSED BY INADEQUATE COORDINATION BY THE CONTRACTOR SHALL BE RECTIFIED AT NO ADDITIONAL COST TO THE OWNER.

PLANNING FOR SEQUENCE OF WORK: ELECTRICAL FEEDERS AND OTHER SIMILAR WORK AS SHOWN AND SPECIFIED SHALL BE SCHEDULED TO CORRESPOND WITH THE SEQUENCE OF WORK NECESSARY TO DEMOLISH, REMOVE AND CONSTRUCT NEW WORK. COORDINATE WITH ALL OTHER TRADES.

OPENINGS IN EXISTING WORK: CUTTING AND PATCHING OF EXISTING WORK SHALL BE PROVIDED. VERIFY EXACT LOCATIONS AND MATERIALS BEFORE PERFORMING WORK. CUTTING OF STRUCTURAL MEMBERS AND BEARING WALLS SHALL NOT BE DONE WITHOUT WRITTEN APPROVAL OF THE ARCHITECT-ENGINEER.

VERIFICATION OF EXISTING WORK: WHERE SHOWN ON PLANS, WORK WHICH IS EXISTING IS ASSUMED TO BE IN PLACE AND SUITABLE FOR THE NECESSARY ALTERATIONS AND ADDITIONS REQUIRED. CONTRACTOR SHALL CAREFULLY FIELD CHECK THESE ITEMS AND INCLUDE ALTERATIONS AS MAY BE NECESSARY FOR PROPER INSTALLATION AND GUARANTEE.

REMOVAL AND OWNERSHIP OF EXISTING WORK: EXISTING ELECTRICAL WORK SHALL BE REMOVED WHERE NECESSARY. UNLESS OTHERWISE SPECIFIED, ALL EQUIPMENT AND MATERIALS SHALL REMAIN THE PROPERTY OF THE OWNER EXCEPT AS THAT JUDGED OBSOLETE OR UNUSABLE BY OWNER. OBSOLETE OR UNUSABLE EQUIPMENT AND MATERIALS SHALL BE REMOVED FROM SITE AND DISPOSED OF IN ACCORDANCE WITH LEGAL AND ACCEPTABLE PRACTICES.

FIRE RATED WALLS: INTEGRITY OF ALL FIRE RATED WALLS AND FLOORS SHALL BE MAINTAINED. OPENINGS AROUND ALL CONDUIT PENETRATION SHALL BE CLOSED WITH UL APPROVED FIRE STOP MATERIAL. ALL OPENINGS SHALL BE SEALED WITH 3M FIRE STOP OR APPROVED EQUAL.

EQUIPMENT PROTECTION: ELECTRICAL EQUIPMENT SHALL BE PROTECTED FROM WEATHER, AT ALL TIMES DURING SHIPMENT, STORAGE AND CONSTRUCTION

DEMOLITION: WHERE DEMOLITION OF EXISTING FACILITY REVEALS ELECTRICAL WORK WHICH WILL INTERFERE WITH NEW WORK, THE CONTRACTOR SHALL RELOCATE THE ELECTRICAL WORK AND RESTORE SERVICE TO ALL AFFECTED ELECTRICAL EQUIPMENT.

*SEE CIVIL PLANS FOR SITE LAYOUT AND DESIGN

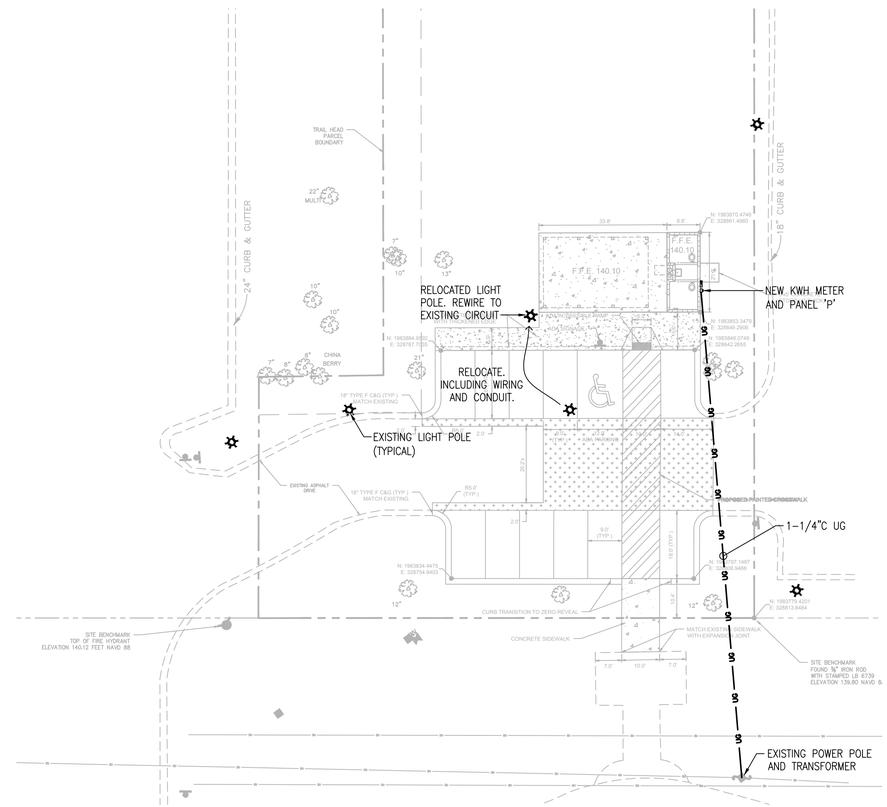

ELECTRICAL SITE PLAN

SCALE: 1" = 20'-0"

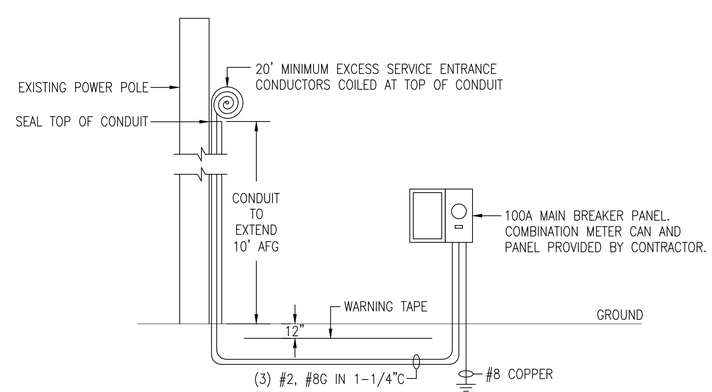

ELECTRICAL RISER DIAGRAM

NOT TO SCALE

Eng Engineering Inc.
8290 Bayberry Road, Jacksonville, Florida 32256-7414
Tel: 904.751.5353 Fax: 904.751.5359
www.eng-engineering.com
MECHANICAL ELECTRICAL FIRE PROTECTION INFRARED FORENSIC

CITY OF KEYSTONE HEIGHTS
"IN GOD WE TRUST"
SINCE 1925

Michael Baker INTERNATIONAL
12740 GRAN BAY PARKWAY WEST
SUITE 2110, JACKSONVILLE, FLORIDA 32258
(904) 380-2500
CORPORATE LICENSE NUMBER 00004307

Designer: EE	Checked by: EE
Technician: EE	Baker Project No: 175439

Seal:

Keymap/Notes:

REVISIONS

No.	Description	Date	By

Project Name:

CITY OF KEYSTONE HEIGHTS TRAIL HEAD

Drawing Name:

ELECTRICAL SITE PLAN

BID DOCUMENTS

ENGINEER OF RECORD

Date: MARCH 2020

Scale: AS SHOWN

Drawing Number: E-100

Plotted on: 1/22/2020 11:43 AM By:Eric Eng
Located: F:\Acadfiles\2019-041 Keystone Heights Trail Head\Construction Drawings\Electrical\E-100.dwg

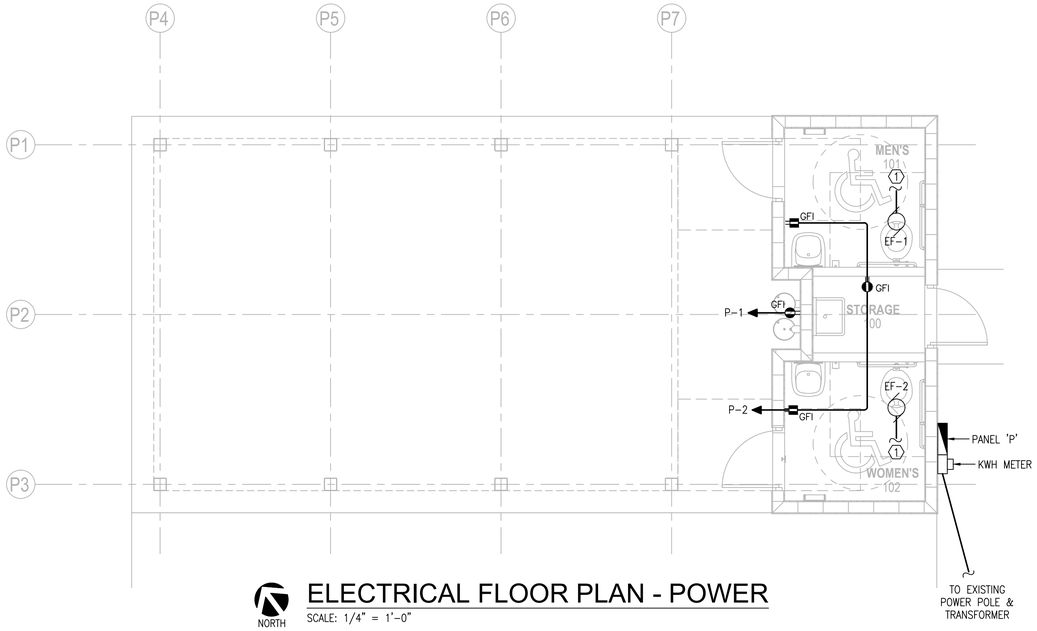

NORTH

ELECTRICAL FLOOR PLAN - POWER

SCALE: 1/4" = 1'-0"

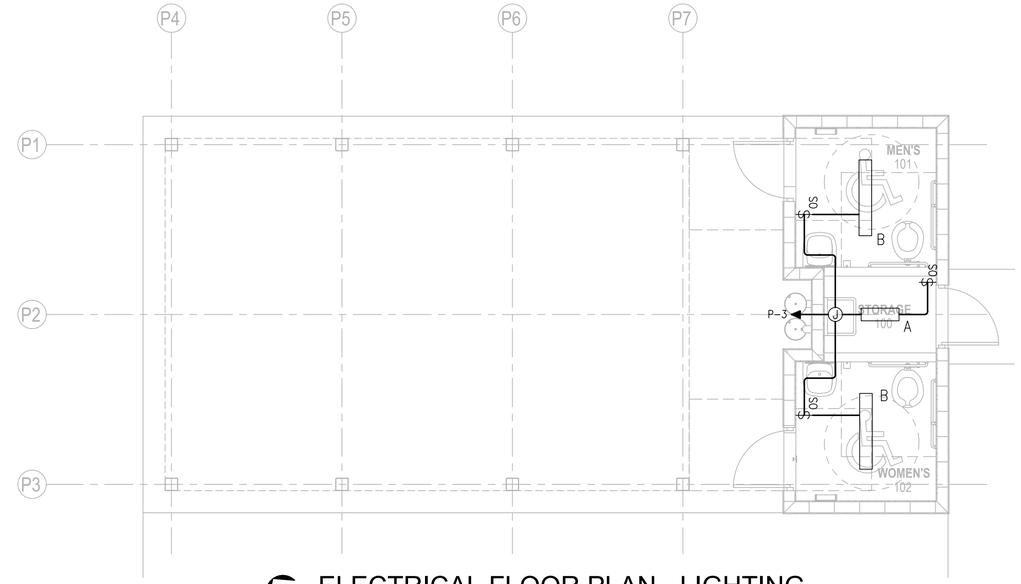

NORTH

ELECTRICAL FLOOR PLAN - LIGHTING

SCALE: 1/4" = 1'-0"

KEYED NOTES:

1. TIE EXHAUST FAN TO LIGHTING CONTROL.

LIGHTING FIXTURE SCHEDULE

TYPE	MANUFACTURER	CATALOG NUMBER	DESCRIPTION	LAMPS Qty	LAMPS Type	VOLTS	MOUNTING	REMARKS	INPUT WATTS
A	BEGHELLI ILLUMINA	BS100LED-2-SA-LO-WT40-120-277V-SM-SS	VANDAL RESISTANT LINEAR FIXTURE	LED	3,691L, 4,000K, 80 CRI	120	SURFACE	WITH EMERGENCY PACK	30
B	BEGHELLI ILLUMINA	BS100LED-4-SA-LO-WT40-120-277V-SM-SS	VANDAL RESISTANT LINEAR FIXTURE	LED	5,673L, 4,000K, 80 CRI	120	SURFACE	WITH EMERGENCY PACK	50

PANEL "P"

NEMA 3R ENCLOSURE

120/240 VOLTS, 1ø, 3 WIRE - S/N
100 AMPS. ☒ MAIN BREAKER OR ☐ M.L.O.
☐ FLUSH OR ☒ SURFACE MOUNTED ☐ TOP OR ☒ BOTTOM FED

10K AIC
@ 240 VOLTS

FEEDER/WIRE & CONDUIT SIZE	KVA	SERVES	TRIP	CKT	A	B	CKT	TRIP	SERVES	KVA	FEEDER/WIRE & CONDUIT SIZE
2#12, #12G, 1/2"C	0.5	RECEPTACLE	20	1			2	20	LIGHTING & EXHAUST FANS	0.2	2#12, #12G, 1/2"C
2#12, #12G, 1/2"C	0.4	WATER COOLER	20	3			4	20	SPARE		
		SPARE	20	5			6	20	SPARE		
		SPACE		7			8		SPACE		
		SPACE		9			10		SPACE		
		SPACE		11			12		SPACE		
		SPACE		13			14		SPACE		
		SPACE		15			16		SPACE		
		SPACE		17			18		SPACE		
		SPACE		19			20		SPACE		
		SPACE		21			22		SPACE		
		SPACE		23			24		SPACE		

FED FROM: XFMR (POLE)

TOTAL CONNECTED LOAD: 1.1 KVA

Eng Engineering Inc.
8030 Bayberry Road, Jacksonville, Florida 32256-7544
Tel: 904.733.8373 Fax: 904.731.0319
www.engengineering.com
MECHANICAL ELECTRICAL FIRE PROTECTION INFRARED FORENSIC

CITY OF KEYSTONE HEIGHTS
"IN GOD WE TRUST"
SINCE 1925

Michael Baker
INTERNATIONAL
12740 GRAN BAY PARKWAY WEST
SUITE 2110, JACKSONVILLE, FLORIDA 32258
(904) 380-2500
CORPORATE LICENSE NUMBER 00004307

Designer:	Checked by:
EE	EE
Technician: EE	Baker Project No: 175439

Seal:

Keymap/Notes:

REVISIONS

No.	Description	Date	By

Project Name:

CITY OF
KEYSTONE HEIGHTS
TRAIL HEAD

Drawing Name:

ELECTRICAL
FLOOR PLAN
POWER / LIGHTING

BID DOCUMENTS

ENGINEER OF RECORD

Date: MARCH 2020

Scale: AS SHOWN

Drawing Number: E-101